2018 WILDCAT XX LTD EPS GREEN INTERNATIONAL [U2018RHX1POSS] - AIR INTAKE ASSEMBLY [302832]

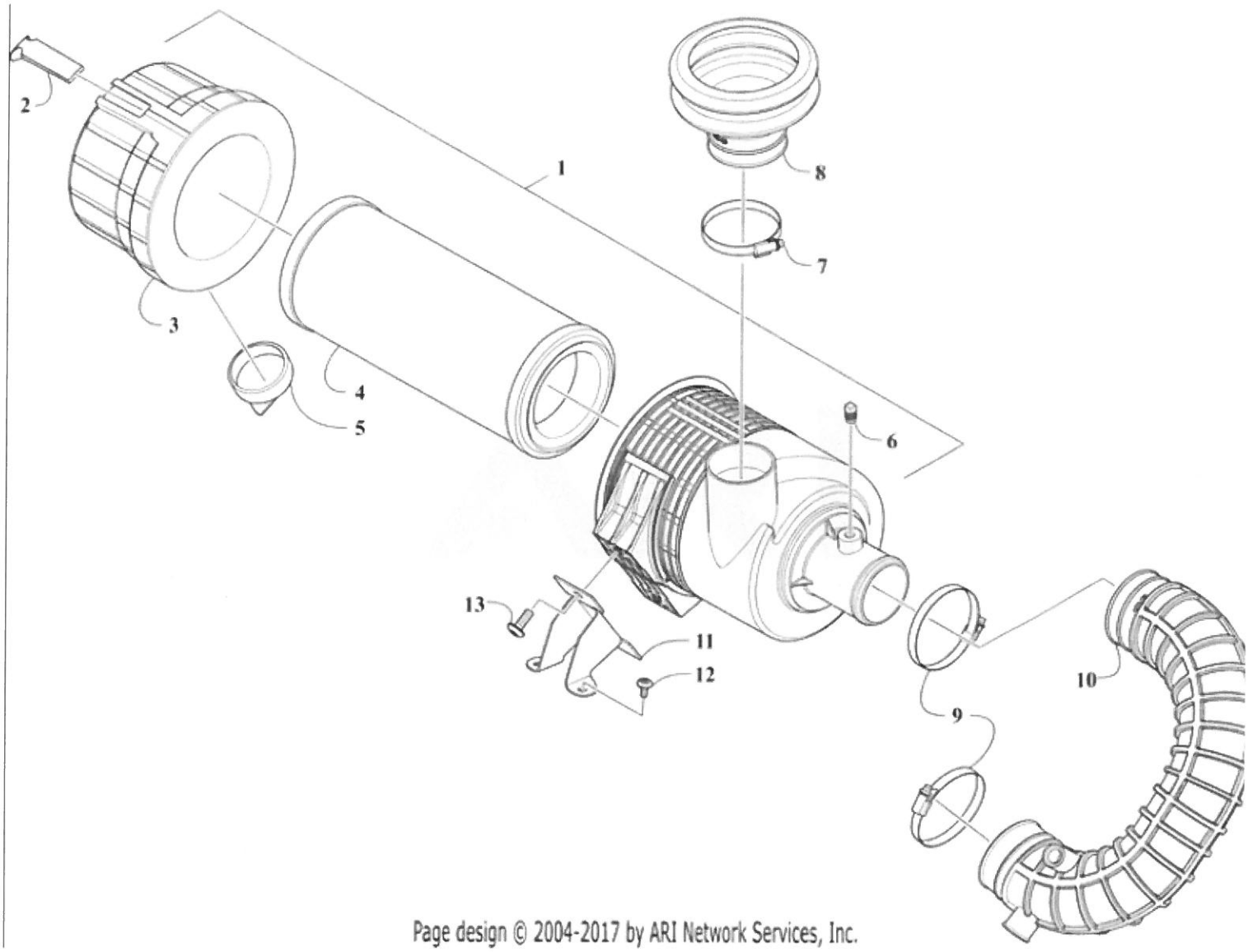

Page design © 2004-2017 by ARI Network Services, Inc.

Ref #	Part #	Description	Qty	Context Note
1	0570-487	Assembly, Air Cleaner	1	(inc. 1-7)
2	0413-391	Latch, Cover	1	
3	1470-151	Cover, Air Cleaner	1	
4	1470-150	Element, Air Cleaner	1	
5	0413-388	Valve, Evacuator	1	
6	0413-390	Plug	1	
7	0423-019	Clamp	1	
8	1470-173	Boot, Air Cleaner - Inlet	1	
9	0423-018	Clamp, Hose	2	
10	1470-180	Boot, Throttle Body	1	
11	1470-175	Bracket, Air Cleaner	1	
12	8476-613	Screw, Machine	2	
13	8476-821	Screw, Machine	2	

2018 WILDCAT XX LTD EPS GREEN INTERNATIONAL [U2018RHX1POSS] - ALTERNATOR ASSEMBLY [302845]

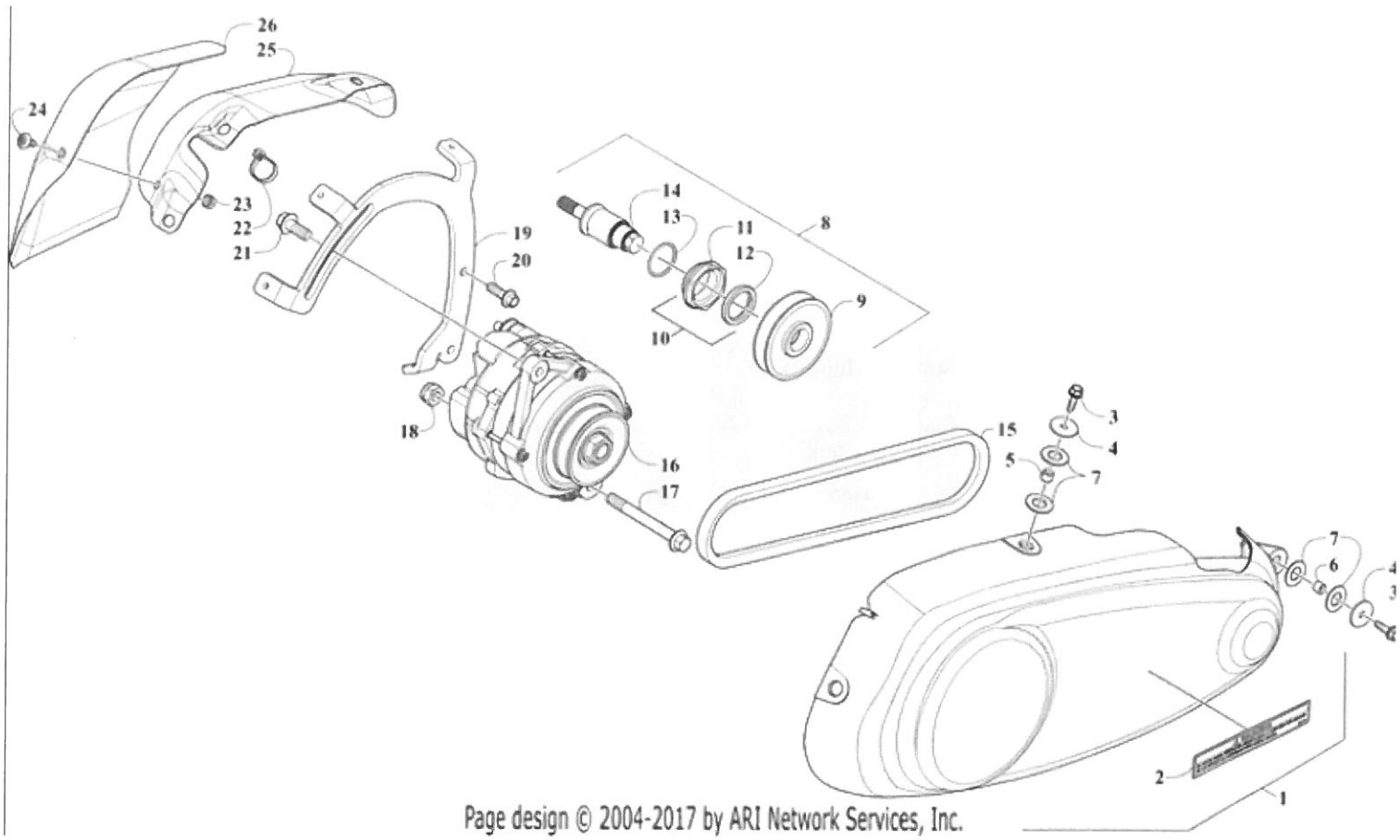

Page design © 2004-2017 by ARI Network Services, Inc.

Ref #	Part #	Description	Qty	Context Note
9	0823-587	Pulley	1	
10	0830-259	Seal, Oil	1	(inc. 11-12)
11	0830-260	Seal, Lip - Screw In	1	
12	0830-269	Seal, Oil	1	
14	0823-670	Shaft, Output	1	
22	0123-788	Tie, Cable - 8 in.	1	
23	0623-038	Nut w/Washer	3	
20	8408-826	Screw, Cap	2	
21	8409-026	Screw, Cap	1	
4	8450-109	Washer	4	
24	8476-612	Screw, Machine	3	
2	9611-690	Decal, Warning (English)	1	
18	1423-161	Nut, Lock	1	
3	2623-138	Screw	3	
13	0830-261	O-Ring	1	
5	1423-646	Spacer	2	
6	1423-647	Spacer	2	
7	1423-633	Washer	10	
15	0823-588	V-Belt	1	
19	0408-111	Bracket, Alternator	1	
17	8409-090	Screw	1	
1	1412-106	Guard, Alternator w/Decal	1	(inc.2)
25	1412-161	Heat Shield - Alternator	1	
26	1412-162	Shield, Heat	1	
8	0823-671	Assembly, Alternator Output	1	(inc. 9-14)
16	0509-141	Alternator	1	

2018 WILDCAT XX LTD EPS GREEN INTERNATIONAL [U2018RHX1POSS] - BELT COOLING AND CLUTCH COVER ASSEMBLY [302841]

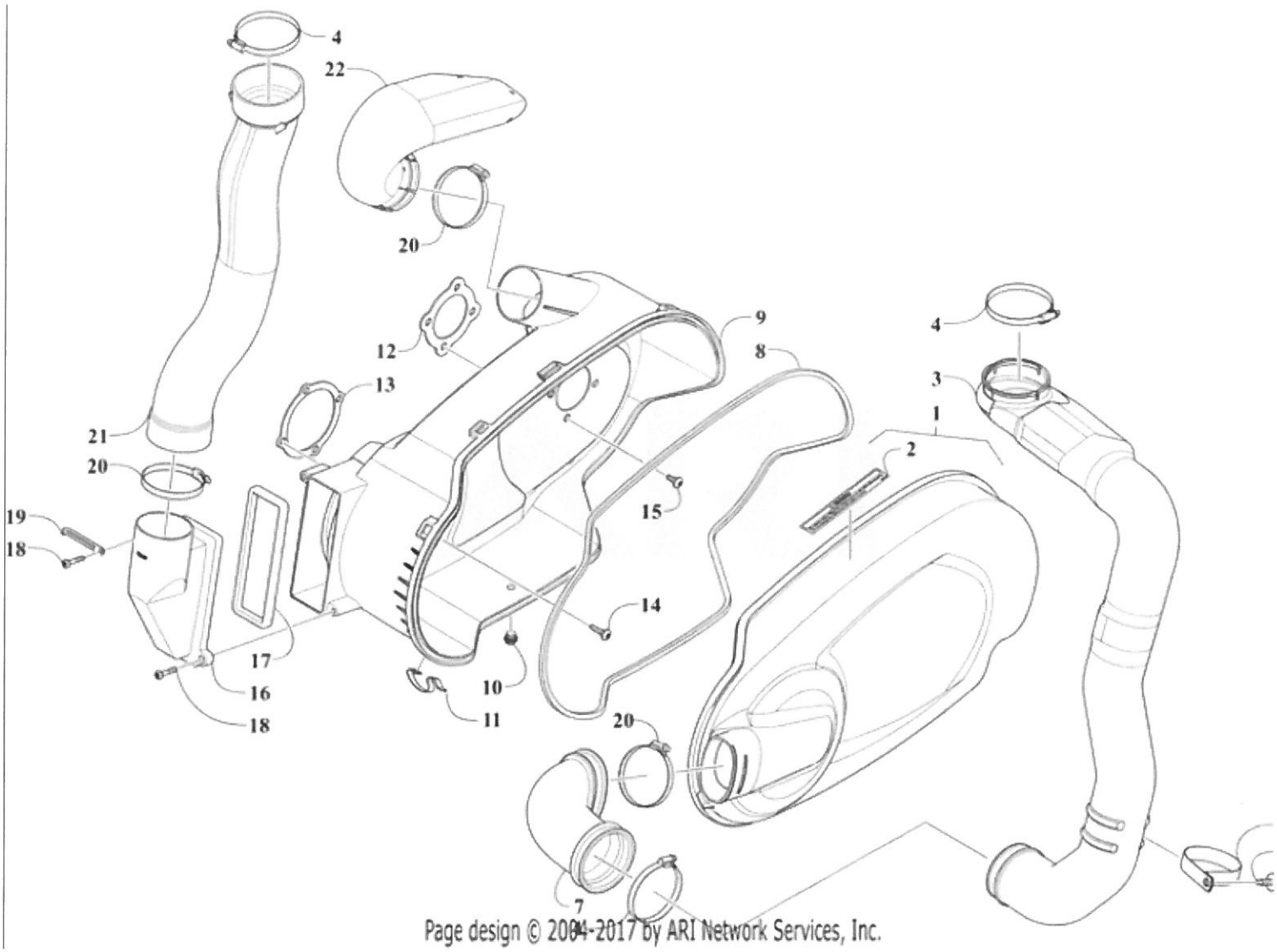

Ref #	Part #	Description	Qty	Context Note
1	2502-700	Cover , CVT - Outer	1	(inc. 2)
2	9611-690	Decal, Warning (English)	1	

2018 WILDCAT XX LTD EPS GREEN INTERNATIONAL [U2018RHX1POSS] - CAMSHAFT, CHAIN, AND VALVE ASSEMBLY [302854]

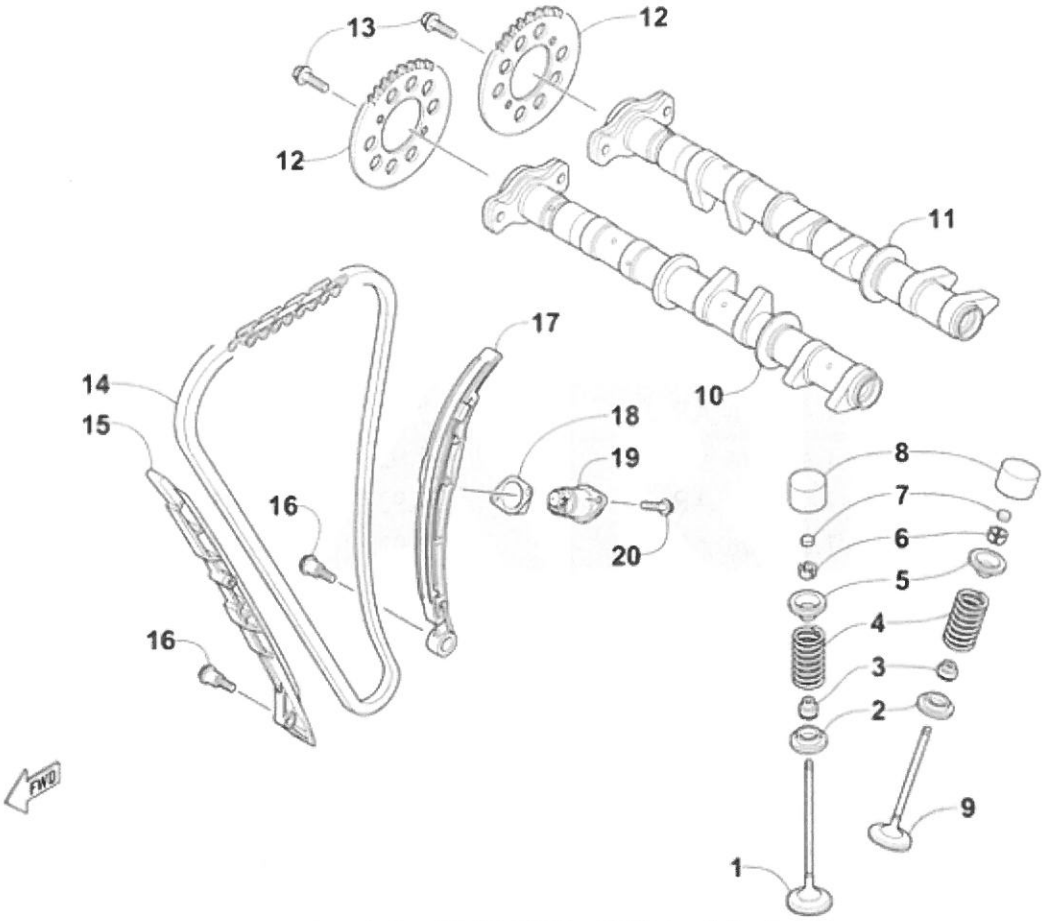

Page design © 2004-2017 by ARI Network Services, Inc.

Ref #	Part #	Description	Qty	Context Note		
1	3020-438	Valve, Intake	6			
2	3020-440	Seat, Spring	12			
3	3020-442	Seal	12		1.67	3.59
4	3020-239	Spring, Valve	12		3.71	7.95
5	3020-240	Retainer, Spring	12		1.73	3.69
6	3020-241	Cotter, Valve	24		2.33	4.99
7	3020-242	Shim, Tappet - 1.20 mm	AR		7.92	16.95
7	3020-243	Shim, Tappet - 1.25 mm	AR		7.92	16.95
7	3020-244	Shim, Tappet - 1.30 mm	AR		7.92	16.95
7	3020-245	Shim, Tappet - 1.35 mm	AR		7.92	16.95
7	3020-246	Shim, Tappet - 1.40 mm	AR		7.92	16.95
7	3020-247	Shim, Tappet - 1.45 mm	AR		7.92	16.95
7	3020-248	Shim, Tappet - 1.50 mm	AR		7.92	16.95
7	3020-249	Shim, Tappet - 1.55 mm	AR		7.92	16.95
7	3020-250	Shim, Tappet - 1.60 mm	AR		7.92	16.95
7	3020-251	Shim, Tappet - 1.65 mm	AR		7.92	16.95
7	3020-252	Shim, Tappet - 1.70 mm	AR		7.92	16.95
7	3020-253	Shim, Tappet - 1.75 mm	AR		7.92	16.95
7	3020-254	Shim, Tappet - 1.80 mm	AR		7.92	16.95
7	3020-255	Shim, Tappet - 1.85 mm	AR		7.92	16.95
7	3020-256	Shim, Tappet - 1.90 mm	AR		8.39	17.95
7	3020-257	Shim, Tappet - 1.95 mm	AR		8.39	17.95
7	3020-258	Shim, Tappet - 2.00 mm	AR		8.39	17.95
7	3020-259	Shim, Tappet - 2.05 mm	AR		8.39	17.95

2018 WILDCAT XX LTD EPS GREEN INTERNATIONAL [U2018RHX1POSS] - CARGO BOX AND REAR BODY ASSEMBLY [302822]

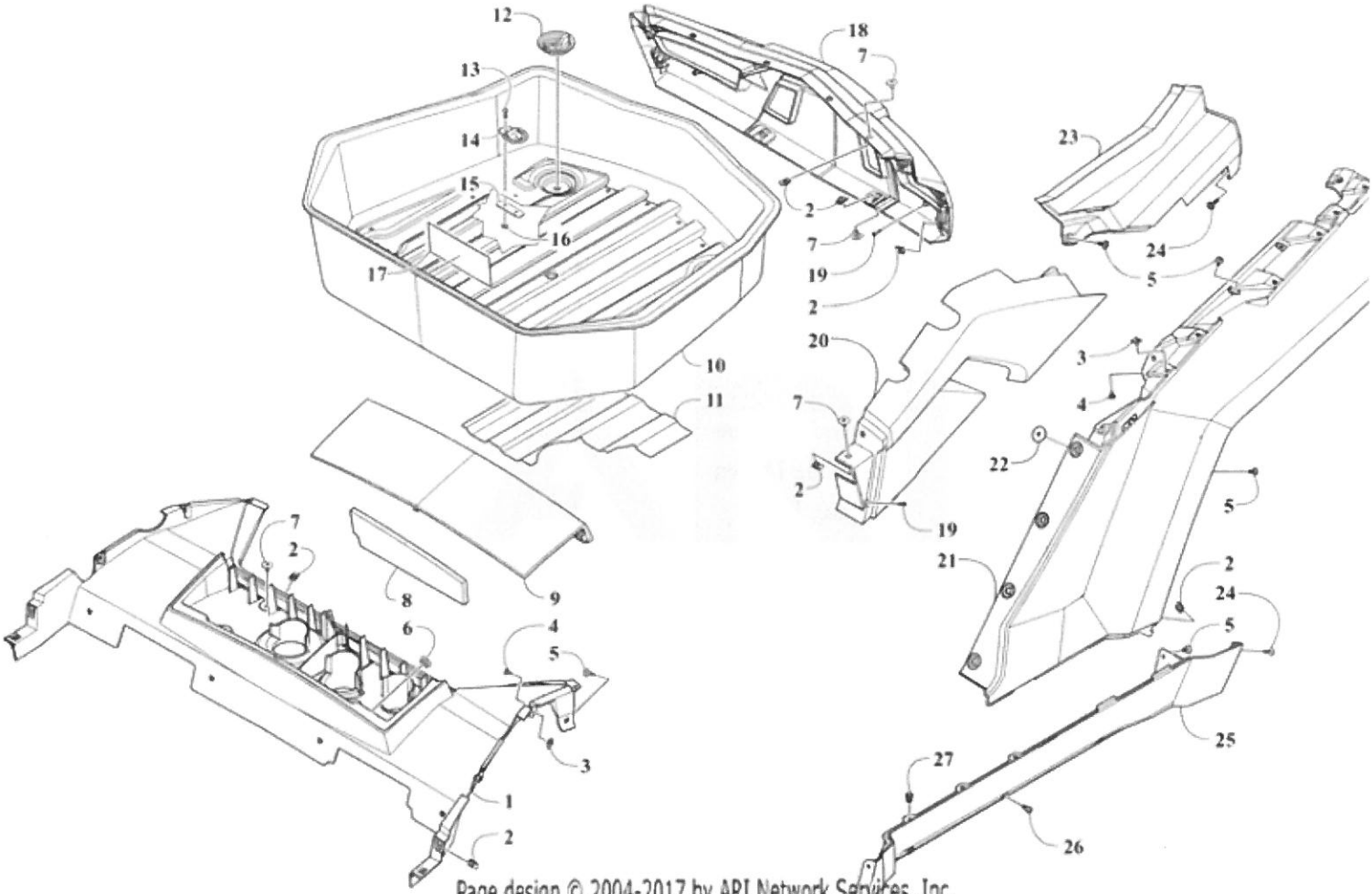

Page design © 2004-2017 by ARI Network Services, Inc.

Ref #	Part #	Description	Qty	Context Note
1	8506-713	Panel, Intake - Gray	1	
2	0423-577	Clip, U-Nut	8	
3	1623-939	Nut, U	12	
4	2623-163	Screw, Self-Tapping	12	
5	1423-198	Screw, Machine	22	
6	0423-678	Grommet	2	
7	1423-133	Screw, Shoulder	10	
8	0417-038	Foam, Intake	1	
9	6406-360	Cover, Intake	1	
10	8506-375	Box, Cargo w/ Decals	1	(inc. 11 and 17)
11	1412-160	Foil	1	
12	1423-575	Screw, Thumb - Assembly	4	
13	8468-620	Screw, Machine	8	
14	6406-905	Plate, Tie Down	4	
15	6406-904	Plate, Back	4	
16	8427-603	Nut, Lock	8	
17	6411-893	Decal, Warning	1	
18	8506-694	Fascia, Rear - Gray	1	
19	1623-933	Screw, Self-Tapping	4	
20	8506-480	Panel, Scoop - Rear - Right - Gray	1	
20	8506-481	Panel, Scoop - Rear - Left - Gray	1	
21	8506-456	Fender, Rear - Right - Gray	1	
21	8506-457	Fender, Rear - Left - Gray	1	
22	1423-109	Screw, Self-Tapping	8	
23	8506-504	Panel, Cargo - Right - Gray	1	
23	8506-505	Panel, Cargo - Left - Gray	1	
24	0423-609	Screw, Machine	6	
25	6406-082	Panel, Rocker - Right - Black	1	
25	6406-083	Panel, Rocker - Left - Black	1	
26	0423-484	Screw, Shoulder	6	
27	1423-276	Rivet, Reinstallable	6	

2018 WILDCAT XX LTD EPS GREEN INTERNATIONAL [U2018RHX1POSS] - CARGO BOX SHIELD [302843]

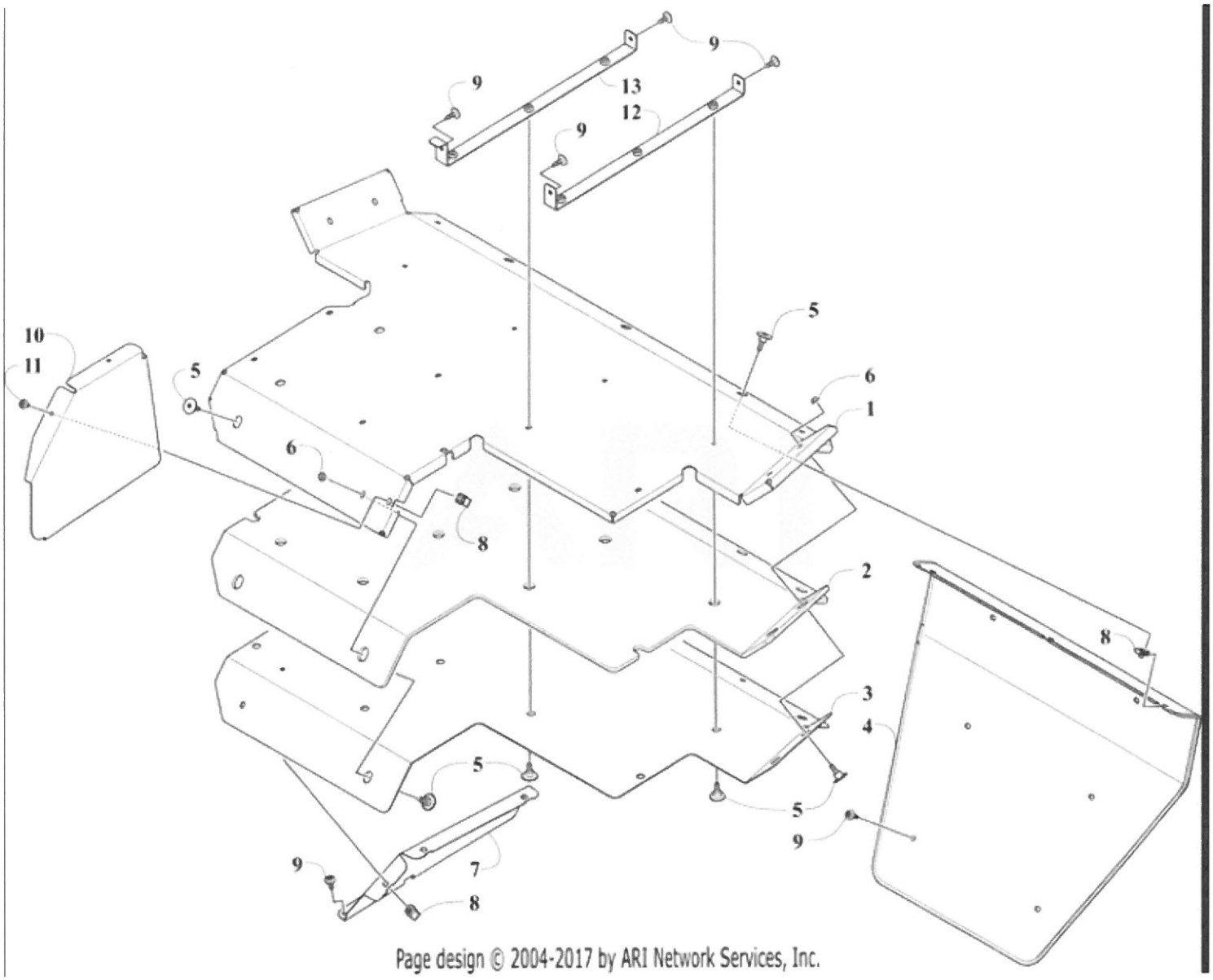

Ref #	Part #	Description	Qty	Context Note
1	7406-109	Plate, Box	1	
2	7406-110	Shield, Fiber - Box	1	
3	7406-103	Shield, Box	1	
4	7406-104	Shield, Fascia	1	
5	1423-518	Screw, Shoulder	23	
6	8427-603	Nut, Lock	7	
7	7406-102	Shield, Harness	1	
8	0423-577	Clip, U-Nut	9	
9	1423-198	Screw, Machine	16	
10	7406-101	Shield, Clutch	1	
11	8476-612	Screw, Machine	2	
12	7406-106	Bracket, Cargo Shield - Outer	1	
13	7406-105	Bracket, Cargo Shield - Inner	1	

2018 WILDCAT XX LTD EPS GREEN INTERNATIONAL [U2018RHX1POSS] - CLUTCH ASSEMBLIES [302846]

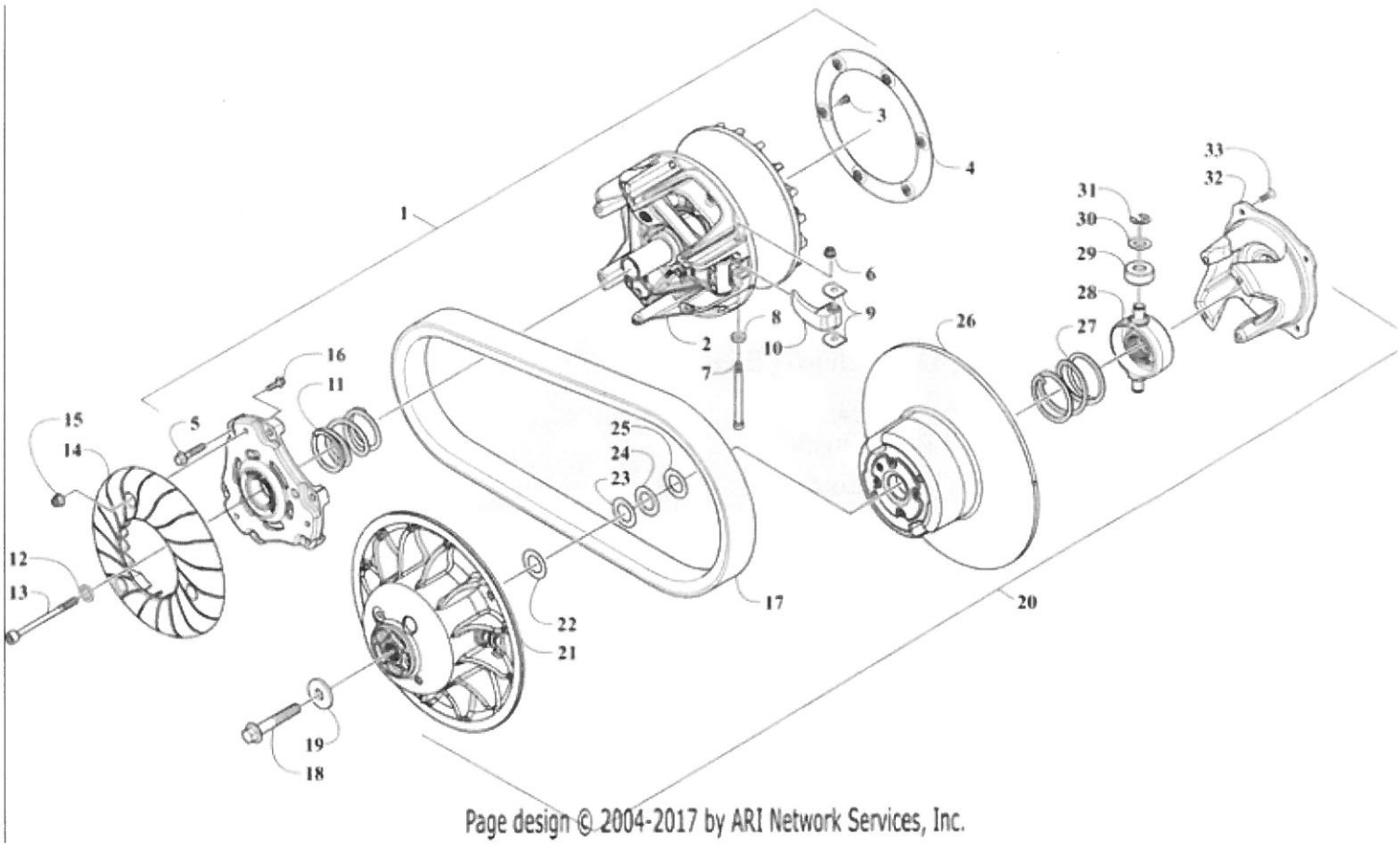

Page design © 2004-2017 by ARI Network Services, Inc.

Ref #	Part #	Description	Qty	Context Note
1	0823-669	Clutch, Drive - Calibrated	1	(inc. 2-10)
2	0823-668	Clutch, Drive - Uncalibrated	1	(inc. 3-9)
3	0623-914	Screw, Self-Tapping	8	
4	0823-636	Cover, Sheave	1	
5	0823-604	Screw, Cap	6	
6	0823-399	Nut, Lock	3	
7	0823-396	Pin, Cam Arm	3	
8	2623-091	Washer	3	
9	0646-880	Washer, Thrust	6	
10	0823-666	Arm, Cam	3	
11	0823-667	Spring, Drive Clutch - Black	1	
12	1623-649	Washer, High Collar	1	
13	1623-792	Bolt, Clutch	1	
14	8427-602	Nut, Lock	3	
15	0646-448	Fan, Drive Clutch	1	
16	8408-620	Screw, Cap	3	
17	0823-529	Belt, Drive	1	
18	8409-060	Screw, Cap	1	
19	2623-120	Washer	1	
20	0823-662	Clutch, Driven - Assembly	1	(inc. 21-33)
21	0748-040	Sheave, Stationary	1	
22	0648-849	Washer, Shim (.030 in.)	AR	
23	0648-850	Washer, Shim (.090 in.)	AR	
24	0648-852	Washer, Shim (.015 in.)	AR	
25	0648-912	Washer, Shim	AR	
26	0748-776	Sheave, Moveable	1	
27	0648-876	Spring, Driven Clutch	1	
28	0648-841	Spider	1	
29	0648-842	Roller	2	
30	0648-700	Washer, Thrust	2	
31	0648-701	Ring, Retaining	2	
32	0823-664	Cam, Driven	1	
33	0648-875	Screw, Machine	4	

2018 WILDCAT XX LTD EPS GREEN INTERNATIONAL [U2018RHX1POSS] - CONSOLE AND FLOOR PANEL ASSEMBLY [302820]

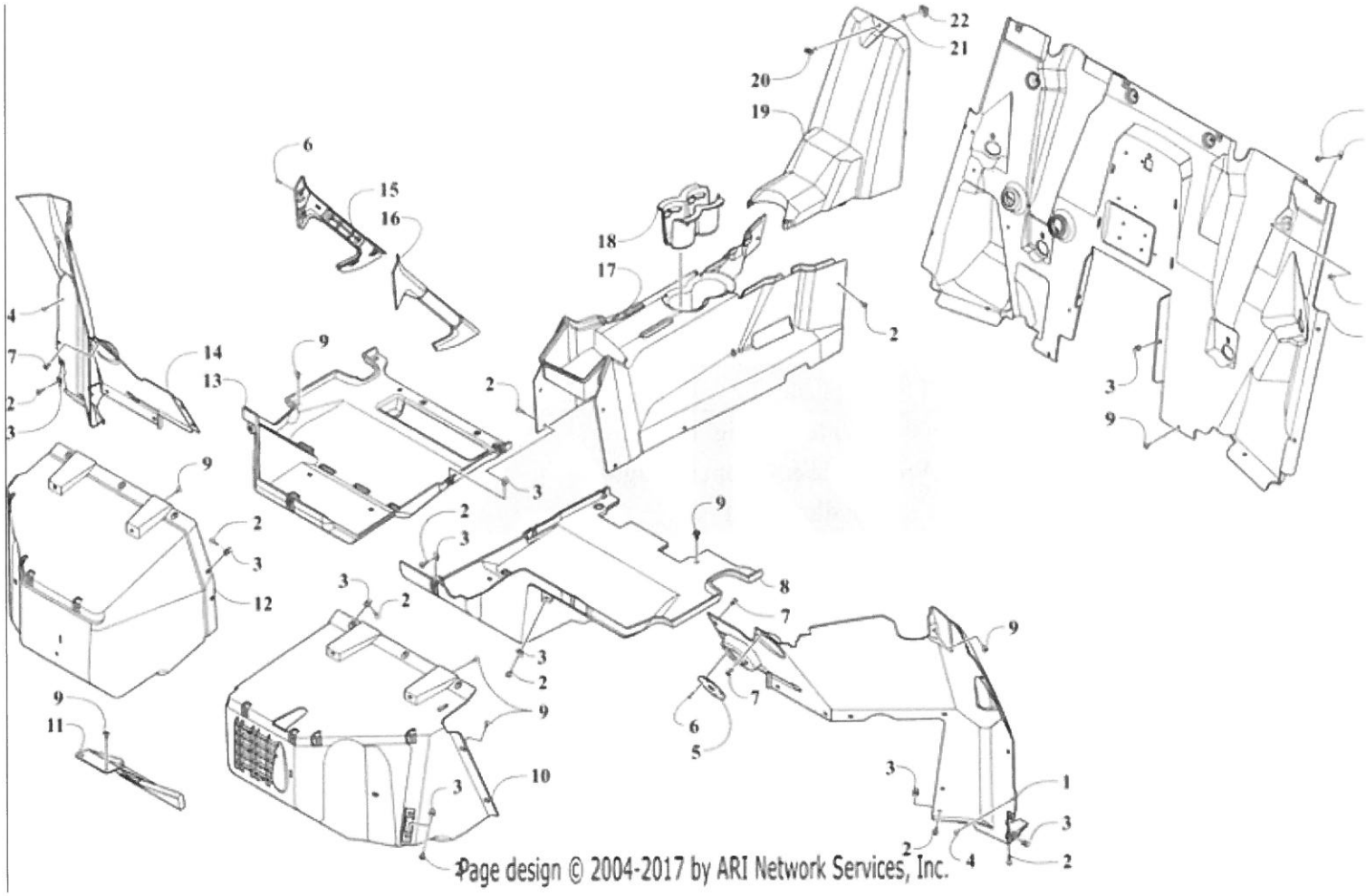

Ref #	Part #	Description	Qty	Context Note
1	6406-059	Panel, Splash - Upper - Left	1	
2	0423-609	Screw, Machine	30	
3	0423-577	Clip, U-Nut	40	
4	2623-163	Screw, Self-Tapping	6	
5	7406-026	Shield, Heat	1	
6	2623-211	Screw	10	
7	1423-276	Rivet, Reinstallable	4	
8	6406-065	Panel, Floor - Left	1	
9	1423-198	Screw, Machine	25	
10	6406-061	Panel, Front Splash - Lower- Left	1	
11	6406-288	Panel, Splash - Lower - Center	1	
12	6406-060	Panel, Front Splash - Lower- Right	1	
13	6406-064	Panel, Floor - Right	1	
14	6406-058	Panel, Front Splash - Upper - Right	1	
15	6406-372	Handle, Right	1	
16	6406-373	Handle, Left	1	
17	6406-066	Console, Front	1	
18	2416-109	Insert, Cupholder	1	
19	6406-200	Console, Cover - Rear	1	
20	1423-207	Knob	1	
21	1423-209	Retainer	1	
22	1423-208	Receiver	1	
23	6406-067	Panel, Splash - Rear	1	

2018 WILDCAT XX LTD EPS GREEN INTERNATIONAL [U2018RHX1POSS] - COOLING ASSEMBLY [302834]

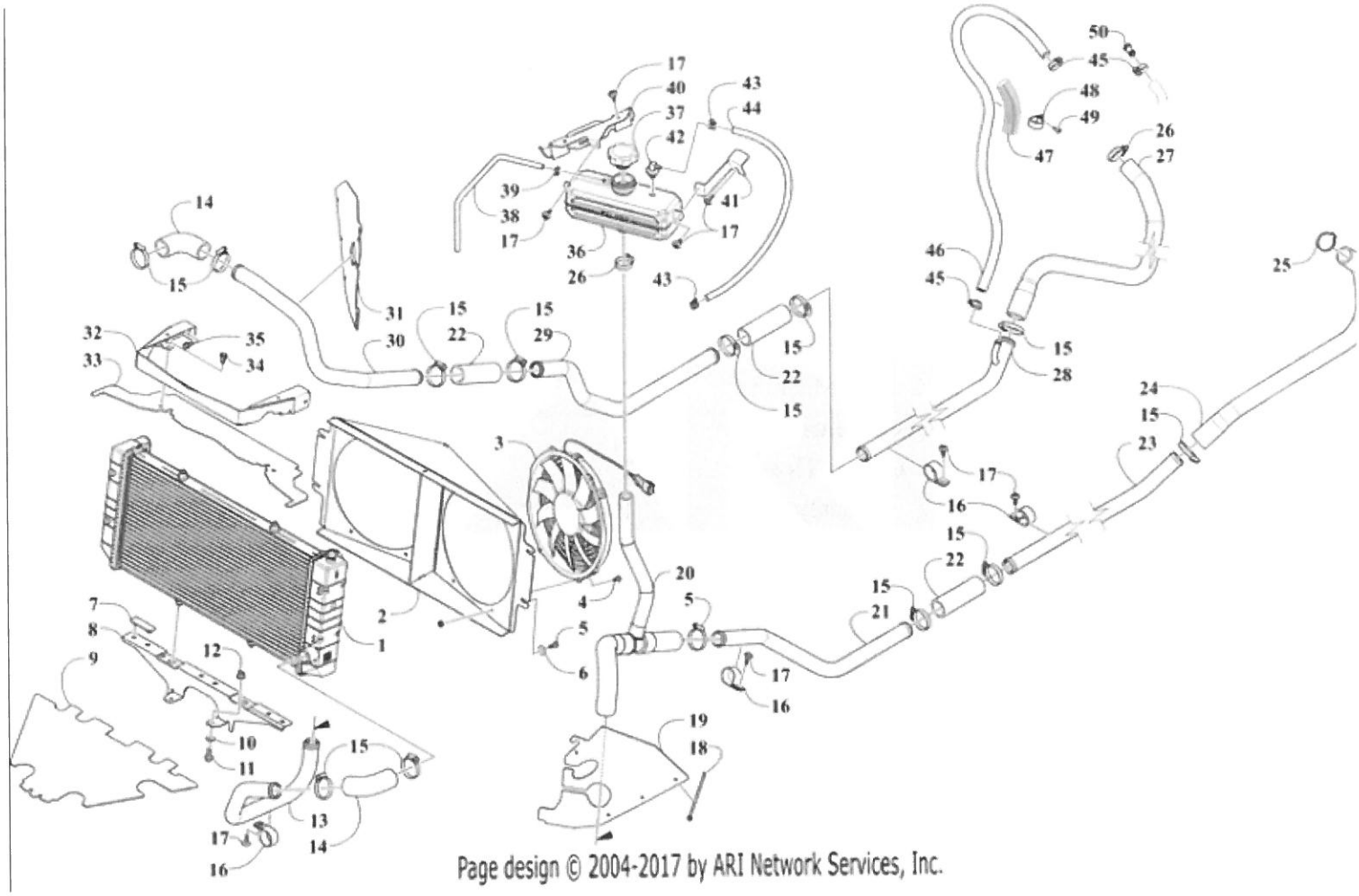

Ref #	Part #	Description	Qty	Context Note
8	7406-111	Bracket, Radiator - Lower	1	
46	0410-430	Hose, Coolant	1	
18	0123-788	Tie, Cable - 8 in.	6	
4	0423-419	Screw, Machine	8	
6	8050-222	Washer	4	
35	8408-821	Screw, Cap	2	
12	8427-802	Nut, Lock	2	
17	1423-198	Screw, Machine	13	
11	8408-820	Screw, Cap	2	
10	8450-127	Washer	2	
49	8476-617	Screw	1	
5	8468-621	Screw, Machine	4	
34	1423-276	Rivet, Reinstallable	2	
43	1623-276	Clamp, Hose	2	
48	0423-044	Clamp	1	
39	0124-045	Clamp, Hose	1	
16	1423-512	Clamp	8	
44	0410-406	Hose, Bleed - Tank	1	
26	2623-088	Clamp, Hose	2	
45	2623-062	Clamp, Hose	3	
7	0406-879	Bumper, Seat - Rear	3	
15	2623-210	Clamp, Hose	14	
25	1423-527	Clamp	1	
50	1423-643	Plug	1	
41	7406-060	Bracket, Overflow - Rear	1	
19	7406-115	Deflector, Air - Left	1	
31	7406-114	Deflector, Air - Right	1	
42	0413-454	Fitting	1	
33	7406-174	Deflector, Air - Upper	1	
37	4606-209	Cap, Coolant Tank	1	
22	0410-405	Hose, Straight - Front	1	
9	7406-100	Deflector, Air - Lower	1	
38	0410-399	Hose, Overflow	1	
40	7406-059	Bracket, Mounting	1	
30	0413-492	Pipe, Coolant - Supply - Front	1	
14	0410-393	Hose, Return	2	
24	0410-394	Hose, Return - Engine	1	
13	0413-493	Pipe, Coolant - Return - Front	1	
23	0413-479	Pipe, Coolant - Return - Rear	1	
27	0410-395	Hose, Engine - Supply	1	
29	0413-478	Pipe, Coolant - Supply - Mid	1	
21	0413-480	Pipe, Coolant - Return - Mid	1	
47	1619-711	Conduit	1	
36	0513-085	Tank, Overflow		
32	7406-099	Bracket, Radiator - Upper	1	

Ref #	Part #	Description	Qty	Context Note
20	0410-416	Hose, Front - Tee	1	
28	0513-105	Pipe, Coolant	1	
3	0413-449	Fan, Radiator	2	
2	0413-500	Shroud, Radiator	1	
1	0413-491	Radiator	1	

2018 WILDCAT XX LTD EPS GREEN INTERNATIONAL [U2018RHX1POSS] - CRANKCASE ASSEMBLY [302855]

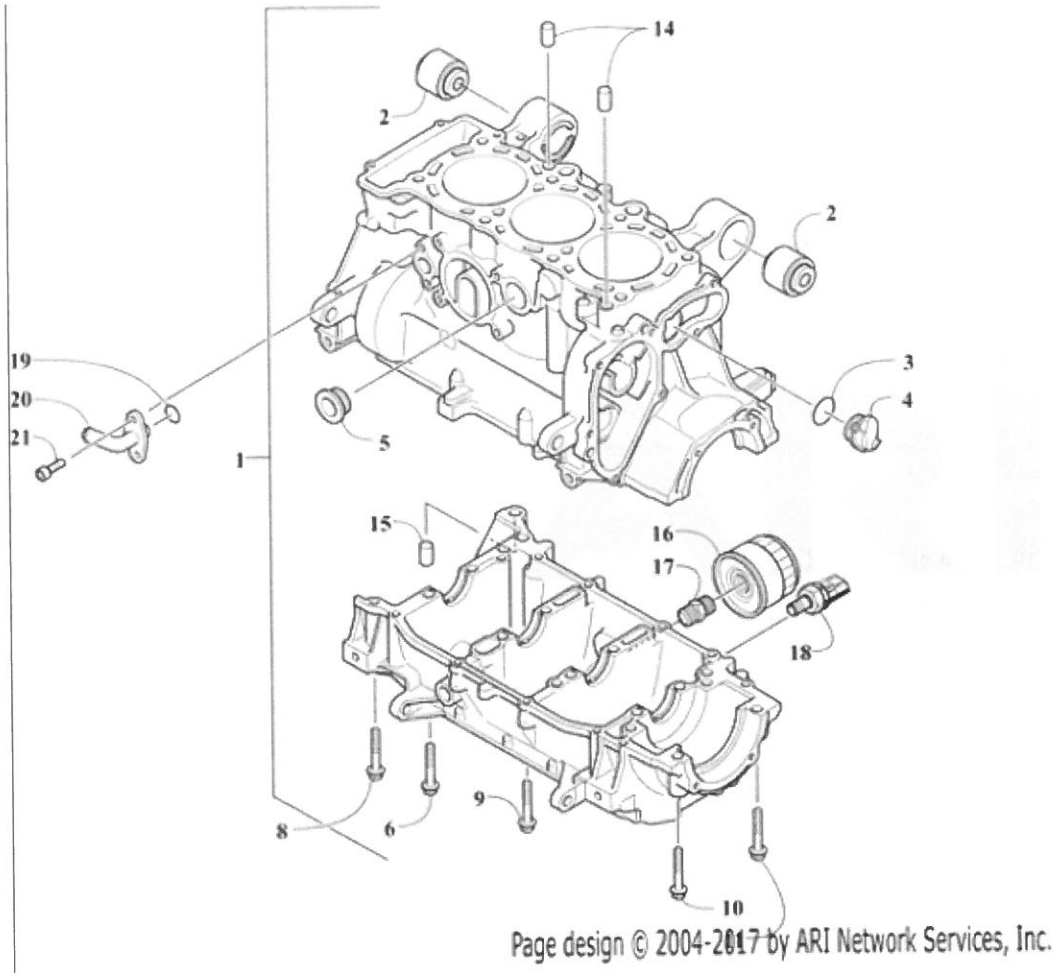

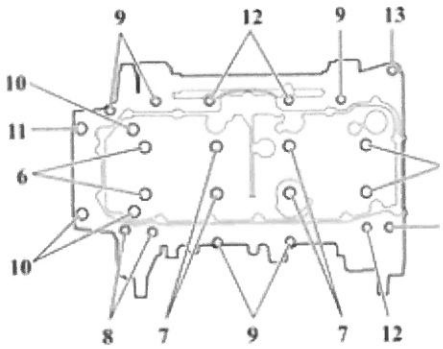

Ref #	Part #	Description	Qty	Context Note
1	3021-907	Crankcase Assembly	1	(inc. 2-7)
2	3021-908	Mount, Engine - Rear	2	
3	3020-140	O-Ring	1	
4	3020-141	Plug	1	
5	3020-142	Plug	1	
6	3020-143	Screw, Cap	4	
7	3020-144	Screw, Cap	4	
8	3020-145	Screw, Cap	3	
9	3020-146	Screw, Cap	5	
10	3020-147	Screw, Cap	3	
11	3020-148	Screw, Cap	1	
12	3020-149	Screw, Cap	3	
13	3020-150	Screw, Cap	1	
14	3020-151	Pin, Dowel	2	
15	3020-155	Pin, Dowel	1	
16	0812-130	Filter, Oil	1	
17	3021-904	Bolt, Union	2	
18	3020-157	Switch, Oil Pressure	1	
19	3020-165	O-Ring	1	
20	3021-903	Fitting, Elbow	1	
21	3020-167	Screw, Cap	2	

2018 WILDCAT XX LTD EPS GREEN INTERNATIONAL [U2018RHX1POSS] - CYLINDER HEAD ASSEMBLY [302853]

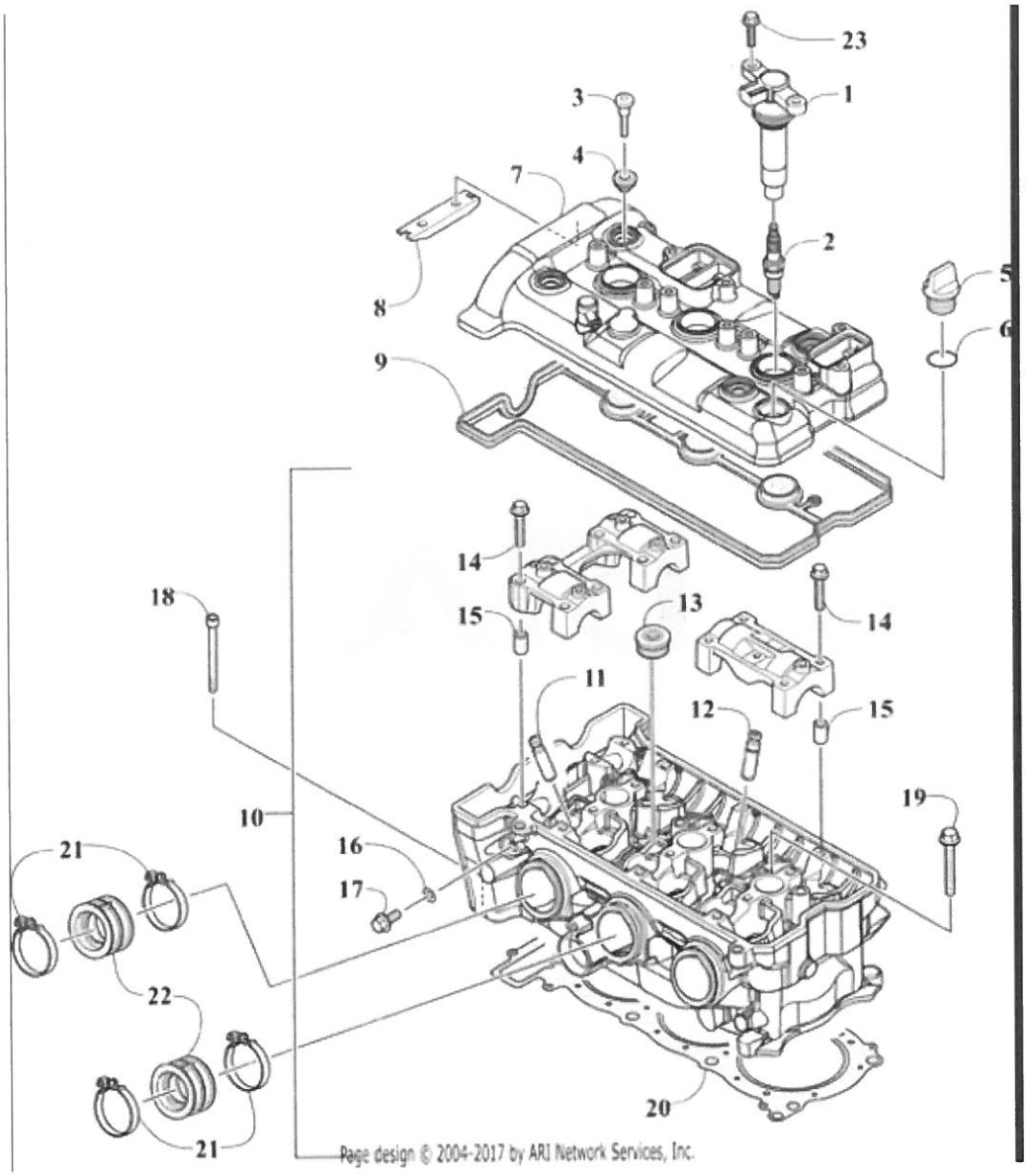

Ref #	Part #	Description	Qty	Context Note
1	3021-930	Coil, Ignition	3	
2	0217-814	Plug, Spark	3	
3	3020-169	Screw, Shoulder	6	
4	3020-170	Grommet	6	
5	3020-171	Plug	1	
6	3020-172	O-Ring	1	
7	3021-867	Cover, Cylinder Head	1	(inc. 8)
8	3020-174	Guide, Chain	1	
9	3020-420	Gasket, Cylinder Cover	1	
10	3021-861	Head, Cylinder - Assembly	1	(inc. 11-17)
11	3020-177	Guide, Valve - Intake	6	
12	3020-178	Guide, Valve - Exhaust	6	
13	3020-142	Plug	2	
14	3020-179	Screw, Cap	16	
15	3020-180	Pin, Dowel	12	
16	3020-181	Gasket	1	
17	3020-182	Screw, Cap	1	
18	3020-183	Screw, Cap	2	
19	3020-184	Screw, Cap	8	
20	3021-871	Gasket, Cylinder Head	1	
21	3020-188	Clamp	6	
22	3021-864	Boot, Intake	3	
23	3021-917	Screw, Cap	6	

2018 WILDCAT XX LTD EPS GREEN INTERNATIONAL [U2018RHX1POSS] - DASH ASSEMBLY [302819]

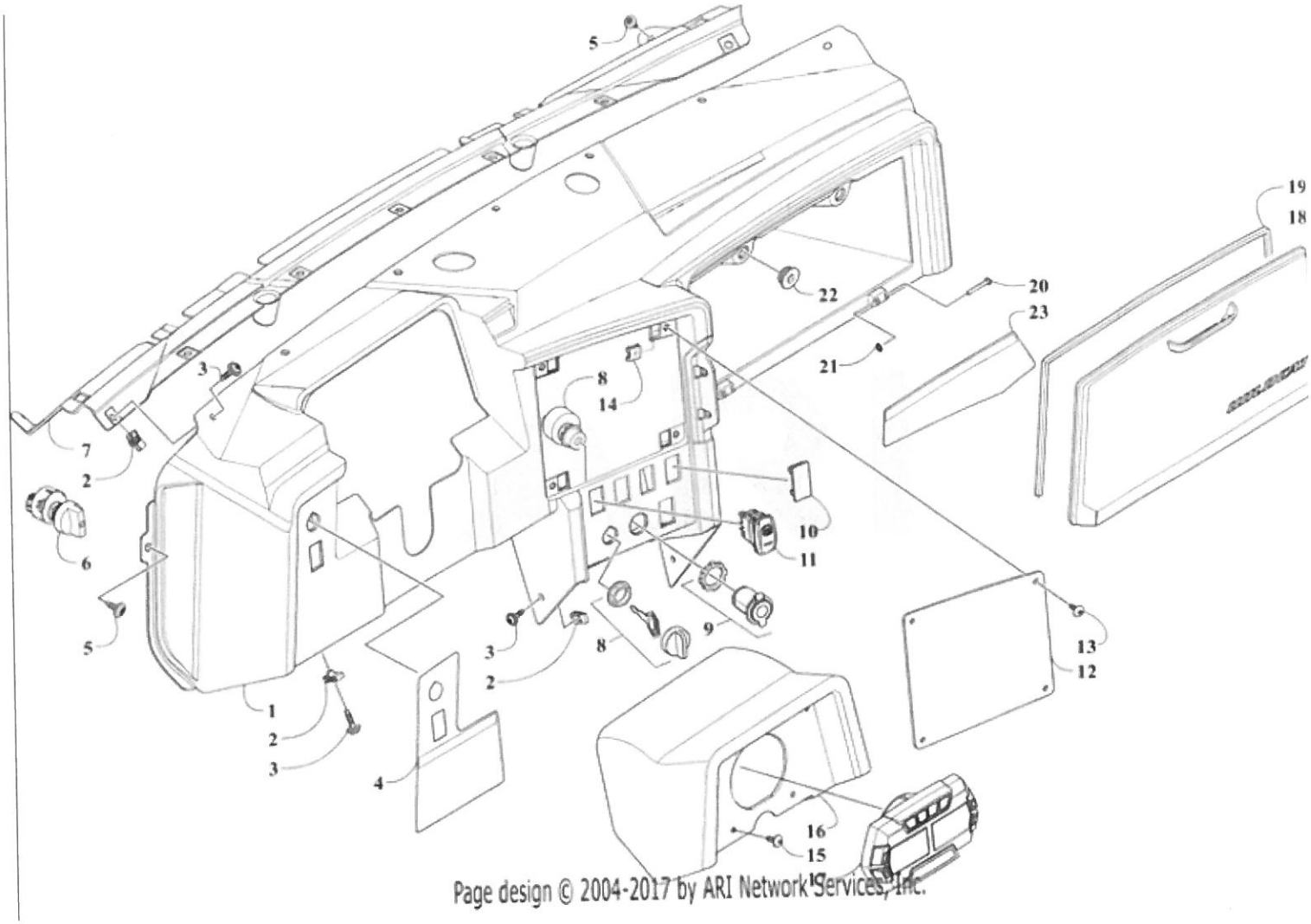

Page design © 2004-2017 by ARI Network Services, Inc.

Ref #	Part #	Description	Qty	Context Note
1	8506-353	Panel, Dash w/ Decals	1	
2	0423-577	Clip, U-Nut	7	
3	0423-609	Screw, Machine	7	
4	6411-481	Decal, Warning - Dash - Left	1	
5	1423-198	Screw, Machine	6	
6	0409-187	Switch, Light	1	
7	6406-201	Panel, Windshield	1	
8	0609-936	Switch, Ignition - Assembly	1	
8	0430-050	Nut, Retaining	1	
8	0430-042	Key, Ignition - Y Series - Left-Side Cut	1	
8	0430-043	Key, Ignition - Z Series - Right-Side Cut	1	
8	0630-324	Cover, Key	1	
9	0641-897	Outlet, Accessory - 12V	1	
9	0445-034	Nut, Retainer	1	
10	0409-070	Plug, Switch Hole	6	
11	0409-148	Switch, 2WD/4WD/Differential Lock	1	
12	6406-619	Cover, Dash	1	
13	2623-168	Screw, Self-Tapping	4	
14	1623-939	Nut, U	4	
15	2623-167	Screw, Self-Tapping	4	
16	6406-068	Pod, Guage	1	
17	0520-363	Gauge, LCD	1	
18	9506-187	Door, Glove Box w/Seal	1	(inc. 19)
19	7406-006	Seal	1	
20	0623-772	Rivet	2	
21	2623-001	Nut, Push	2	
22	0423-678	Grommet	2	
23	6411-482	Decal, Warning - Dash - Right	1	

2018 WILDCAT XX LTD EPS GREEN INTERNATIONAL [U2018RHX1POSS] - DECALS [302872]

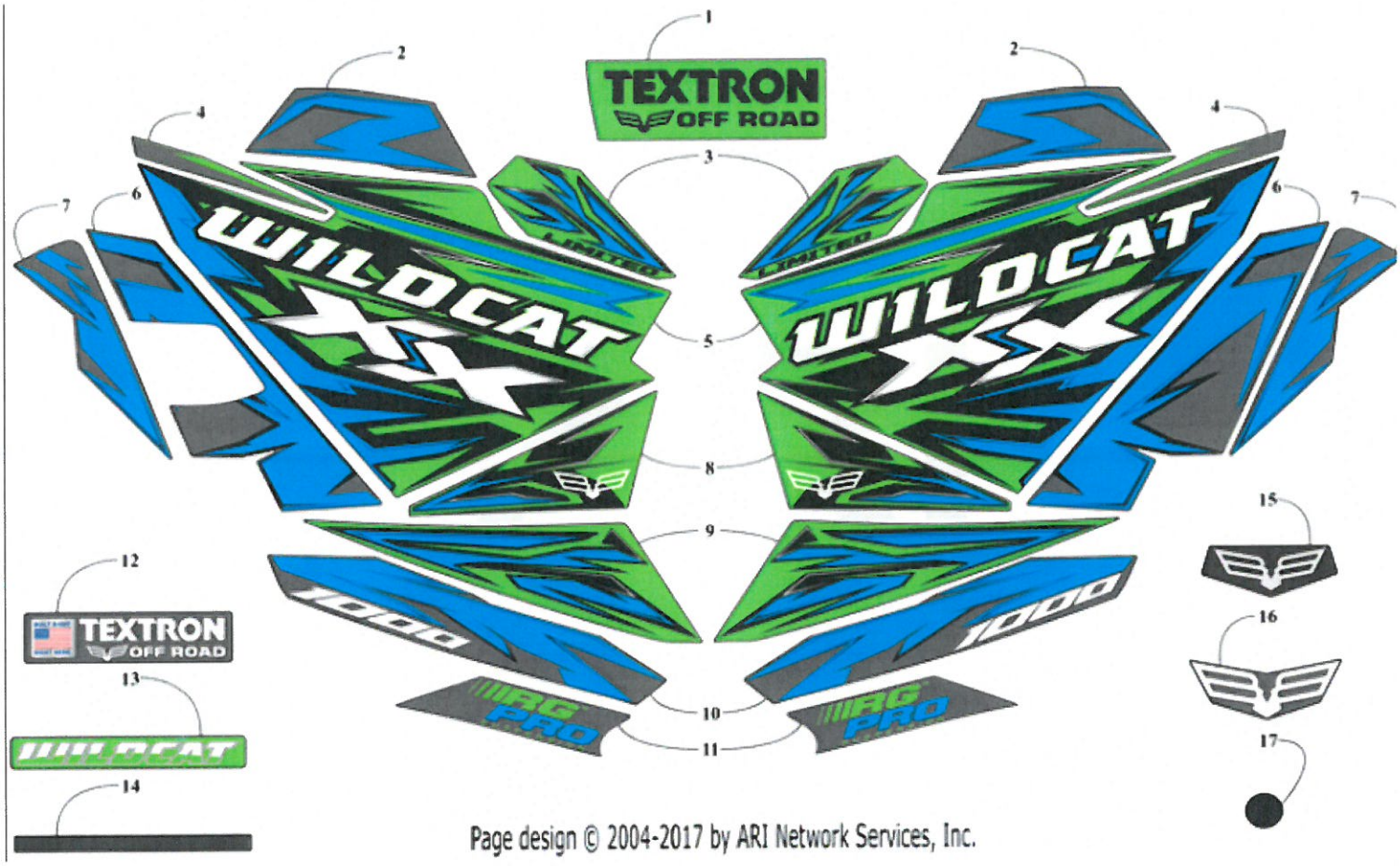

Page design © 2004-2017 by ARI Network Services, Inc.

Ref #	Part #	Description	Qty	Context Note	ACE MSRP
1	6411-723	Decal, Hood - Center	1		
2	6411-734	Decal, Vent - Right	1		
2	6411-735	Decal, Vent - Left	1		
3	6411-726	Decal, Fender - Front - Right	1		
3	6411-727	Decal, Fender - Front - Left	1		
4	6411-730	Decal, Door - Upper - Rear - Right	1		
4	6411-731	Decal, Door - Upper - Rear - Left	1		
5	6411-732	Decal, Door - Lower - Right	1		
5	6411-733	Decal, Door - Lower - Left	1		
6	6411-742	Decal, Fender - Rear - Lower - Right	1		
6	6411-743	Decal, Fender - Rear - Lower - Left	1		
7	6411-744	Decal, Fender - Rear - Lower - Right	1		
7	6411-745	Decal, Fender - Rear - Lower - Left	1		
8	6411-740	Decal, Rocker Panel - Right	1		
8	6411-741	Decal, Rocker Panel - Left	1		
9	6411-724	Decal, Hood - Outer - Right	1		
9	6411-725	Decal, Hood - Outer - Left	1		
10	6411-738	Decal, Fender - Rear - Upper - Right	1		
10	6411-739	Decal, Fender - Rear - Upper - Left	1		
11	6411-736	Decal, Vent - Rear - Right	1		
11	6411-737	Decal, Vent - Rear - Left	1		
12	6411-746	Decal, Rear - Center	1		
14	6411-914	Decal, CV Cap	1		
16	6411-747	Decal, Rear - Center - Lower	1		
17	6411-425	Decal, Cap - Wheel	4		
15	6411-423	Decal, Steering Wheel	1		1.99
13	5411-832	Decal, Wildcat	1		2.37

2018 WILDCAT XX LTD EPS GREEN INTERNATIONAL [U2018RHX1POSS] - DOOR ASSEMBLY [302869]

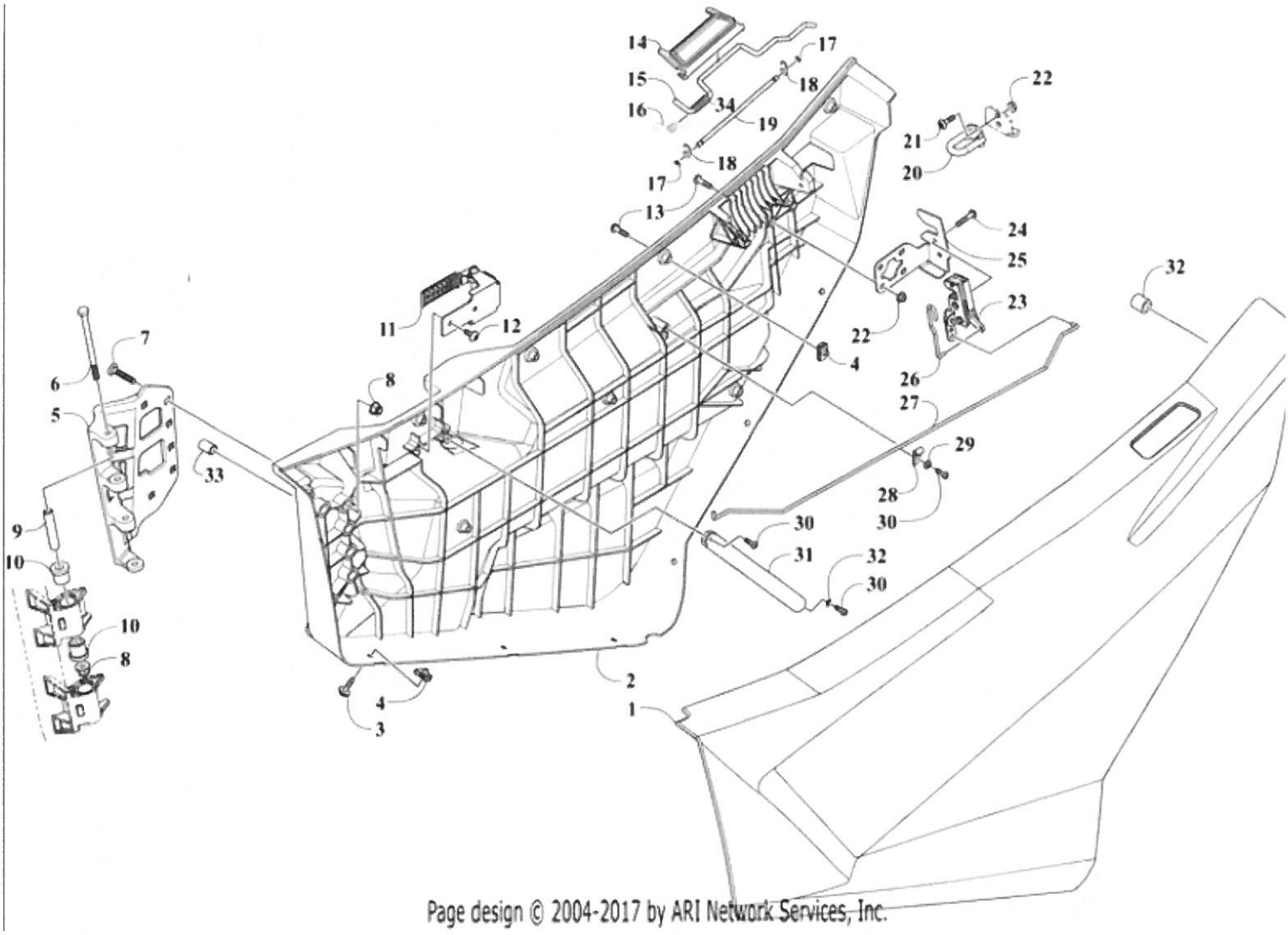

Page design © 2004-2017 by ARI Network Services, Inc.

Ref #	Part #	Description	Qty	Context Note
1	0518-344	Door, Panel w/Decal - Right - Outer - Green	1	(See Decals Page for Decals)
1	0518-345	Door, Panel w/Decal - Left - Outer - Green	1	(See Decals Page for Decals)
1	8506-598	Door, Panel w/o Decals - Right - Outer - Green	1	
1	8506-599	Door, Panel w/o Decals - Left - Outer - Green	1	
2	9506-120	Panel, Door - Inner - Assembly - Right	1	
2	9506-121	Panel, Door - Inner - Assembly - Left	1	
3	0423-609	Screw, Machine	12	
4	0423-577	Clip, U-Nut	22	
5	9506-044	Plate, Hinge - Right	1	
5	9506-045	Plate, Hinge - Left	1	
6	H646701	BOLT,HXHD-M8 X 1.25 X 110-PC10.9	2	
7	1423-577	Bolt, Carriage	4	
8	8427-802	Nut, Lock	6	
9	1423-606	Spacer	2	
10	1423-579	Bushing	4	
11	6406-698	Actuator, Door - Right	1	
11	6406-699	Actuator, Door - Left	1	
12	1623-661	Screw, Self-Tapping	4	
13	8468-625	Screw, Machine	18	
14	6406-552	Handle, Door	2	
15	7406-028	Rod, Actuator - Rear - Right	1	
15	7406-029	Rod, Actuator - Rear - Left	1	
16	6406-914	Spring - Right	1	
16	6406-915	Spring - Left	1	
17	0423-667	E-Clip	4	
18	1423-609	Retainer	4	
19	7406-041	Rod, Actuator	2	
20	9506-332	Striker, Door	2	
21	8477-620	Screw, Self-Tapping	4	
22	8427-603	Nut, Lock	12	
23	6406-696	Latch, Door - Right	1	
23	6406-697	Latch, Door - Left	1	
24	8468-631	Screw, Machine	4	
25	7406-234	Bracket, Door Latch - Right	1	
25	7406-235	Bracket, Door Latch - Left	1	
26	6406-218	Link, Door Actuator - Rear	2	
27	6406-842	Link, Door Actuator - Front - Right	1	
27	6406-843		1	

Ref #	Part #	Description	Qty	Context Note
		Link, Door Actuator - Front - Left		
28	2402-387	Clamp	2	
29	8050-157	Washer, Flat	2	
30	2623-211	Screw	6	
31	8506-863	Handle, Door Grab	2	
32	6406-742	Insert	4	
33	6406-741	Insert	6	
34	1623-011	Washer	12	

2018 WILDCAT XX LTD EPS GREEN INTERNATIONAL [U2018RHX1POSS] - DRIVE TRAIN ASSEMBLY [302835]

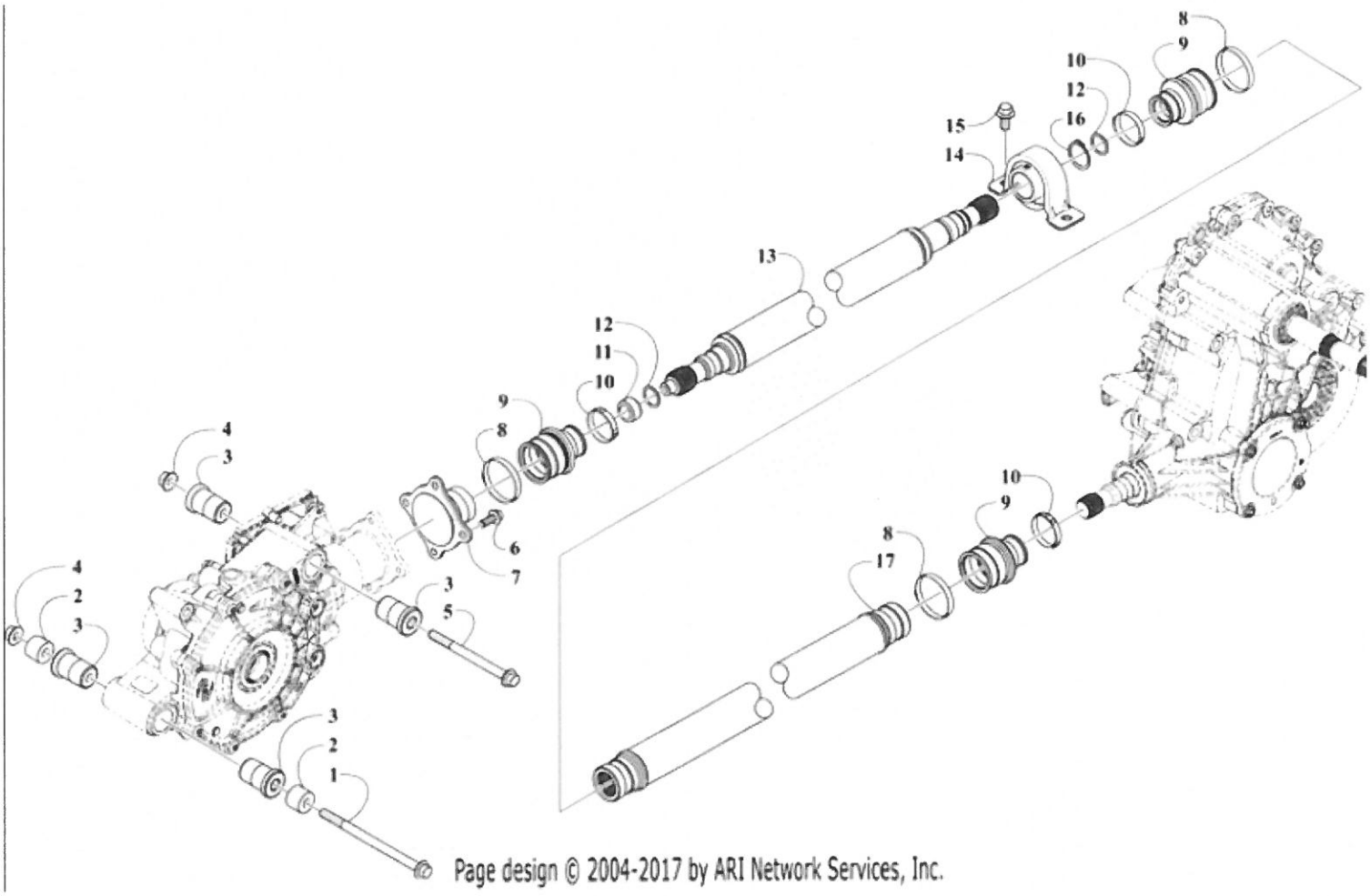

Ref #	Part #	Description	Qty	Context Note
1	1423-266	Screw, Cap	2	
2	1423-179	Spacer	4	
3	0801-268	Bushing	6	
4	1423-334	Nut, Lock	3	
5	0423-404	Screw, Cap	1	
6	8408-821	Screw, Cap	4	
7	2402-265	Flange, Output	1	
8	1423-315	Clamp	3	
9	2402-237	Boot, Coupler	3	
10	1423-314	Clamp	3	
11	2402-332	Spacer	1	
12	1423-292	O-Ring	2	
13	2402-541	Shaft, Prop - Front	1	
14	1402-968	Bearing	1	
15	8409-021	Screw, Cap	2	
16	1423-175	Ring, Retaining	1	
17	2402-542	Shaft, Prop - Mid	1	

2018 WILDCAT XX LTD EPS GREEN INTERNATIONAL [U2018RHX1POSS] - ENGINE AND RELATED PARTS [302833]

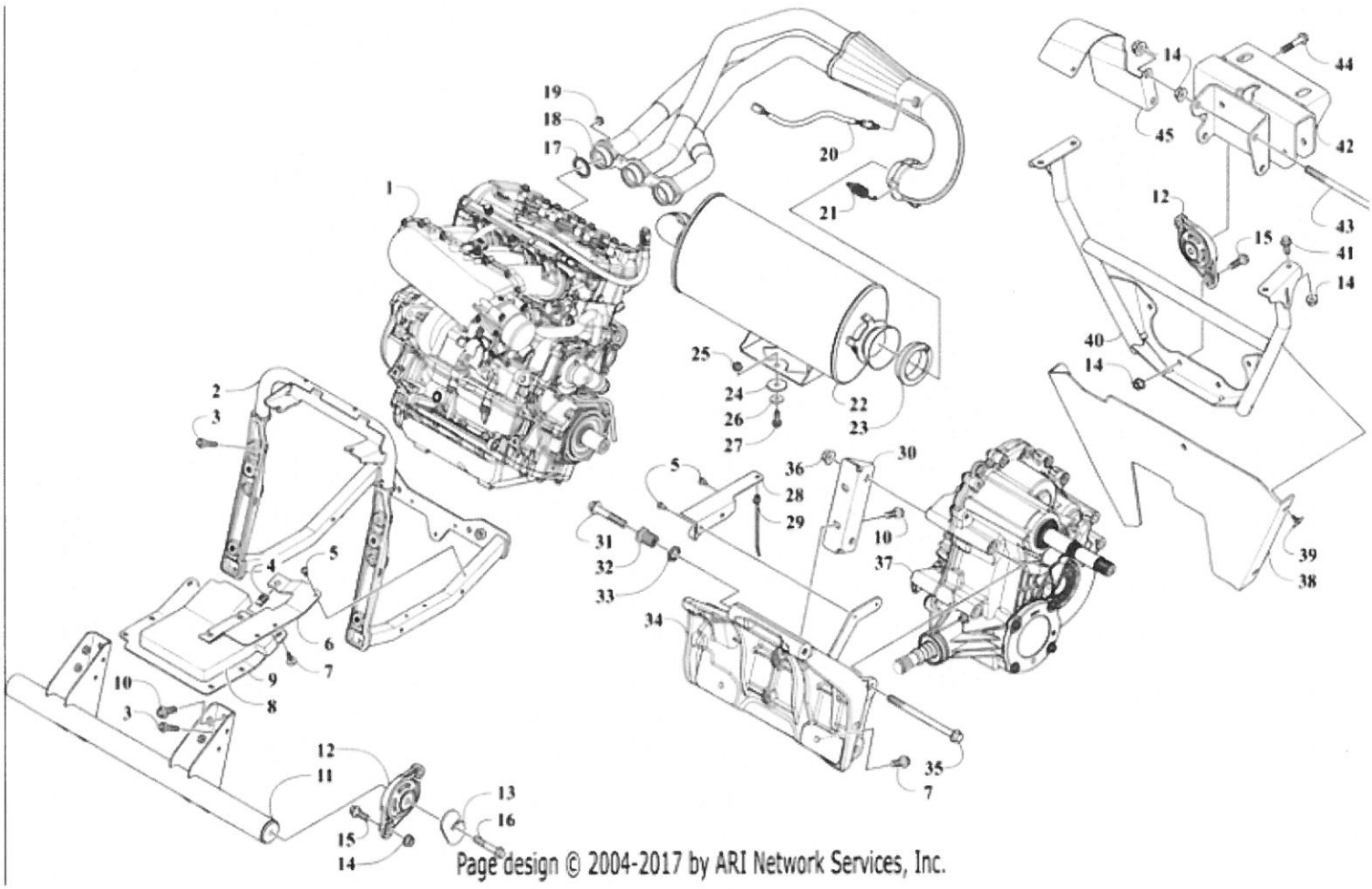

Ref #	Part #	Description	Qty	Context Note
3	8413-847	Screw, Cap	4	
22	0512-923	Muffler	1	
40	8506-654	Mount, Transaxle	1	
31	8413-275	Screw, Cap	2	
4	0423-577	Clip, U-Nut	3	
26	8450-133	Washer	3	
27	8408-820	Screw, Cap	3	
7	0423-609	Screw, Machine	6	
14	1423-334	Nut, Lock	10	
35	1423-239	Screw, Cap	2	
39	1423-109	Screw, Self-Tapping	4	
10	8413-031	Screw, Cap	6	
5	1623-490	Screw, Cap	6	
29	0623-677	Tie, Cable - Push Mount	1	
41	8409-025	Screw, Cap	4	
15	8408-030	Screw, Cap	8	
19	1623-912	Nut, Lock	6	
25	1623-912	Nut, Lock	3	
44	8408-055	Screw, Cap	2	
36	1423-390	Nut, Lock	2	
21	0612-668	Spring	4	
43	1623-729	Screw, Cap	2	
16	8408-061	Screw, Cap	2	
24	1412-023	Grommet	3	
33	1423-245	Nut, Jam	1	
13	1423-549	Washer, Limiter	2	
28	1412-135	Shield, Transaxle	1	
6	7406-045	Bracket, Engine Panel	1	
8	0417-056	Foam, Engine Panel	1	
45	1412-136	Shield, Heat	1	
23	2612-615	Seal, Exhaust Pipe	1	
30	0408-110	Bracket, Engine - Transaxle	1	
17	3020-466	Gasket, Exhaust	3	
12	0408-117	Mount, Engine	4	
38	6406-950	Panel, Engine	1	
32	1423-385	Nut, Adjuster	1	
20	0430-135	Sensor, Oxygen	1	
9	9506-180	Panel, Engine - Bottom	1	
42	8506-768	Mount, Transaxle - Rear	1	
11	8506-891	Mount, Engine - Front	1	
2	0508-063	Mount, Engine Cradle	1	
34	0508-064	Mount, Engine - Transaxle - Mid	1	
18	0512-991	Manifold	1	
37	2502-541	Transaxle, Rear	1	
1	0562-003	Engine	1	

2018 WILDCAT XX LTD EPS GREEN INTERNATIONAL [U2018RHX1POSS] - FRAME AND RELATED PARTS [302823]

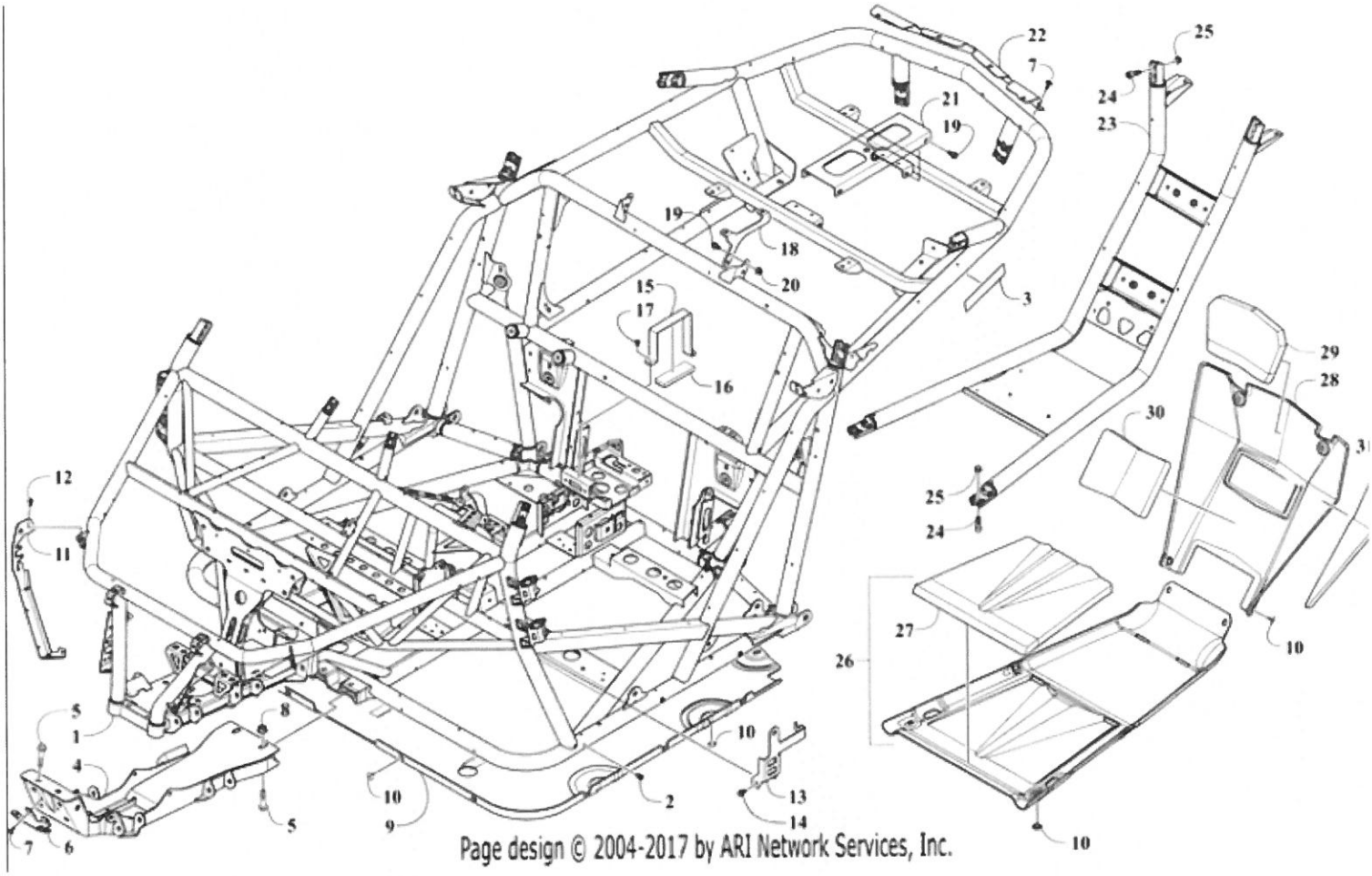

Ref #	Part #	Description	Qty	Context Note
1	8506-323	Frame, Main	1	(inc. 2-3)
2	2623-173	Insert	10	
3	2411-974	Decal, Reflector - Red	2	
4	9506-347	Skid, Lower - Front	1	
5	8415-255	Screw, Cap	4	
6	6406-551	Bracket, Lower Mount	1	
7	1423-198	Screw, Machine	6	
8	1423-390	Nut, Lock	2	
9	6406-287	Panel, Skid - Center	1	
10	1423-109	Screw, Self-Tapping	20	
11	6406-130	Bracket, Headlight - Right	1	
11	6406-131	Bracket, Headlight - Left	1	
12	2623-059	Screw, Machine	8	
13	6406-577	Bracket, Support - Shifter Cable	1	
14	8408-816	Screw, Cap	2	
15	6406-540	Bracket, Battery	1	
16	0417-063	Pad, Battery Bracket	1	
17	8408-612	Screw, Cap	1	
18	6406-812	Bracket, Gusset - Right	1	
18	6406-813	Bracket, Gusset - Left	1	
19	8409-820	Screw, Cap	8	
20	8427-802	Nut, Lock	4	
21	6406-342	Bracket, Tire - Hold Down	1	
22	5406-994	Bracket, Cargo Mount	1	
23	8506-523	Frame, Hoop - Rear	1	
24	1423-140	Screw, Cap	8	
25	1423-161	Nut, Lock	8	
26	9506-208	Panel, Skid - Rear Assembly	1	(inc. 27)
27	0417-062	Foam, Skid Panel	1	
28	9506-207	Fascia, Rear - Lower - Assembly	1	(inc. 29-32)
29	0417-058	Foam, Fascia - Rear - Upper	1	
30	0417-059	Foam, Fascia - Rear - Lower	1	
31	0417-060	Foam, Fascia - Rear - Right	1	
31	0417-061	Foam, Fascia - Rear - Left	1	

2018 WILDCAT XX LTD EPS GREEN INTERNATIONAL [U2018RHX1POSS] - FRONT AND SIDE PANEL ASSEMBLIES [302867]

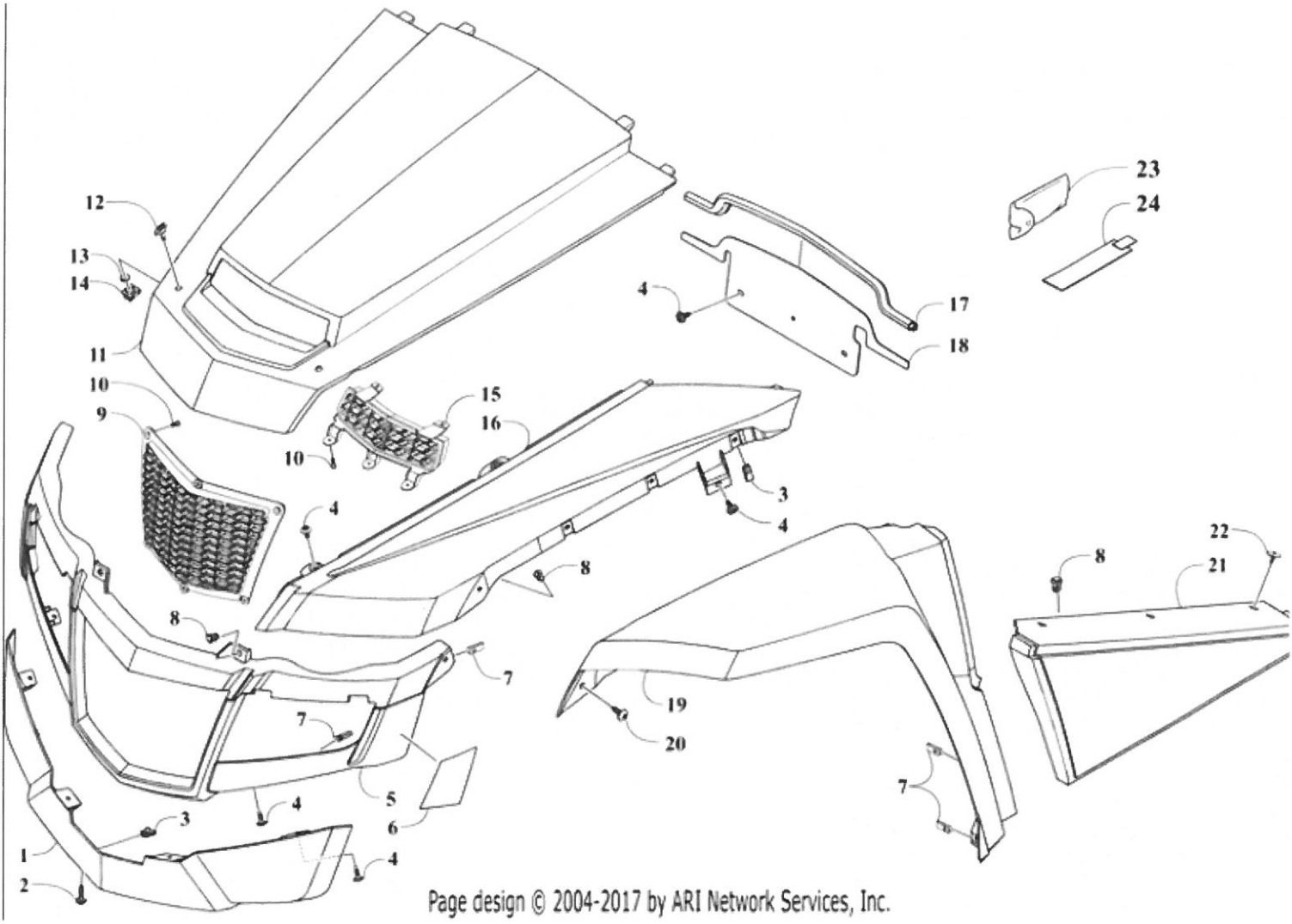

Ref #	Part #	Description	Qty	Context Note
1	6406-076	Panel, Air	1	
2	0423-609	Screw, Machine	2	
3	0423-577	Clip, U-Nut	12	
4	1423-198	Screw, Machine	33	
5	9506-263	Fascia, Front w/Reflector - Green	1	(inc. 6)
6	6411-474	Decal, Reflector - Right	1	
6	6411-475	Decal, Reflector - Left	1	
7	1623-030	Clip, U-Nut	14	
8	1423-276	Rivet, Reinstallable	10	
9	6406-340	Grille, Front - Lower	1	
10	2623-211	Screw	11	
11	8506-381	Hood - Green	1	
12	1423-207	Knob	2	
13	1423-209	Retainer	2	
14	1423-208	Receiver	2	
15	6406-341	Grill, Front - Upper	1	
16	8506-398	Fender, Front - Inner - Right - Green	1	
16	8506-399	Fender, Front - Inner - Left - Green	1	
17	1423-601	Heatshield, Seal	1	
18	6406-987	Heatshield, Hood	1	
19	9506-330	Fender, Front - Outer w/Tape - Right - Green	1	
19	9506-331	Fender, Front - Outer w/Tape - Left - Green	1	
20	2623-163	Screw, Self-Tapping	6	
21	8506-574	Panel, Side - Front - Right - Green	1	
21	8506-575	Panel, Side - Front - Left - Green	1	
22	1423-109	Screw, Self-Tapping	6	
23	9506-109	Kit, Tool	1	
24	0707-582	Retainer, Velcro	1	

2018 WILDCAT XX LTD EPS GREEN INTERNATIONAL [U2018RHX1POSS] - FRONT DRIVE GEARCASE ASSEMBLY [302836]

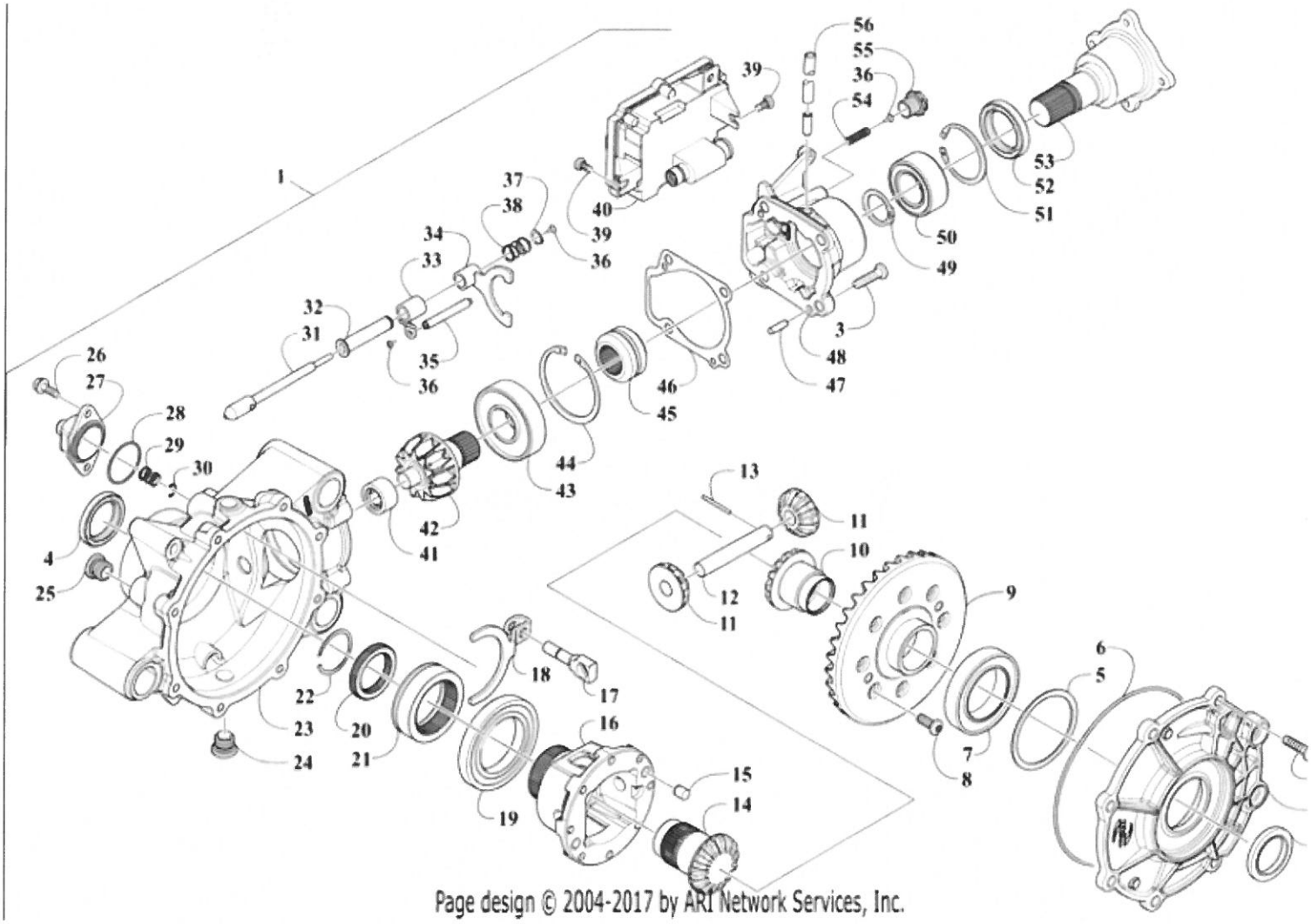

Ref #	Part #	Description	Qty	Context Note
1	2502-740	Gearcase, Front Assembly	1	
2	3333-017	Cover, Gearcase - Front	1	
3	3333-001	Screw	12	
4	3333-042	Seal	2	
5	3333-009	Shim	1	
6	3333-041	O-Ring	1	
9	3333-051	Gear, Ring - 34T	1	
10	3333-025	Gear - Output - 14T	1	
11	3333-023	Pinion, 10T - Bevel	2	
12	3333-053	Pin, Differential	1	
13	3333-004	Pin, Dowel	1	
14	3333-024	Gear, Output - 14T	1	
16	3333-052	Housing, Differential Lock	1	
17	3333-031	Shaft, Lock	1	
18	3333-040	Fork, Lock	1	
19	3333-011	Bearing, Ball	1	
20	3333-030	Coupler, Splined	1	
21	3333-034	Dog, Engagement	1	
22	3333-006	Ring, Retaining	1	
23	3333-019	Housing, Gearcase	1	
27	3333-020	Cover, Lock	1	
28	3333-045	O-Ring	1	
29	3333-016	Spring	1	
30	3333-008	Ring, Retaining	1	
31	3333-036	Shaft, Slider	1	
32	3333-032	Slider, Sleeve	1	
33	3333-038	Arm, Shift	1	
34	3333-039	Fork	1	
35	3333-037	Shaft, Actuator	1	
36	3333-003	Screw	3	
37	3333-007	Ring, Retaining	1	
38	3333-015	Spring, Compression	1	
41	3333-013	Bearing	1	
42	3333-028	Pinion	1	
43	3333-010	Bearing	1	
44	3333-005	Ring, Retaining	1	
45	3333-033	Coupler, Drive	1	
46	3333-044	Gasket	1	
48	3333-018	Cover, Input	1	
50	3333-012	Bearing, Ball	1	
51	0	Not A Serviceable Item	1	(p/n TBD)
52	3333-043	Seal	1	
53	3333-027	Shaft, Input	1	
54	3333-014	Spring	1	
55	3333-022	Plug	1	

Ref #	Part #	Description	Qty	Context Note
56	3333-029	Vent, Hose	1	
39	0423-396	Screw, Self Tapping	3	
26	0817-006	Screw, Speed	2	
47	0817-077	Pin, Dowel	1	
49	0817-017	Ring, Retaining	1	
25	0817-002	Plug	1	
8	3333-002	Screw	8	
24	0817-003	Plug	1	
7	0817-029	Bearing	1	
15	0817-137	Pin, Dowel	2	
40	3307-191	Actuator, Electric Lock	1	

2018 WILDCAT XX LTD EPS GREEN INTERNATIONAL [U2018RHX1POSS] - FRONT SUSPENSION ASSEMBLY [302870]

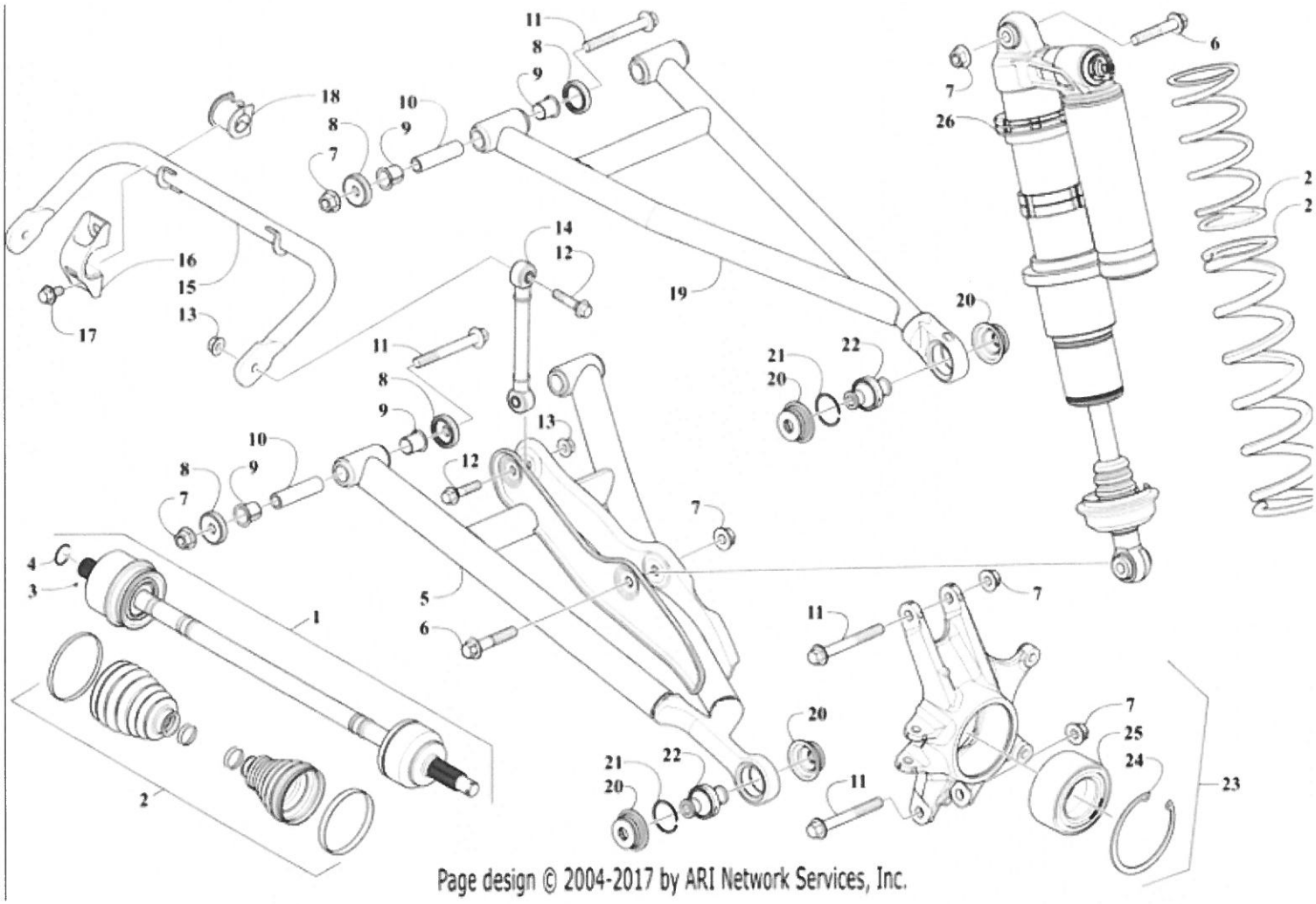

Ref #	Part #	Description	Qty	Context Note
1	2502-708	Kit, Halfshaft	2	(inc. 2-4)
2	0	Not A Serviceable Item	2	P\N TBD
3	0	Not A Serviceable Item	2	P\N TBD
4	0	Not A Serviceable Item	2	P\N TBD
5	1503-664	A-Arm, Front - Lower - Right - Green	1	(inc. 8-10 and 20-22)
5	1503-665	A-Arm, Front - Lower - Left - Green	1	(inc. 8-10 and 20-22)
6	8415-265	Screw, Cap	4	
7	1423-390	Nut, Lock	8	
8	1423-159	Seal	8	
9	2402-077	Bearing	8	
10	0404-706	Sleeve	4	
11	8413-200	Screw, Cap	4	
12	8409-045	Screw, Cap	4	
13	1423-334	Nut, Lock	4	
14	0403-684	Link, Swaybar	2	
15	1503-668	Bar, Sway - Front	1	
16	0404-694	Clamp, Sway Bar Bushing	2	
17	8409-021	Screw, Cap	4	
18	0404-728	Bushing, Swaybar	2	
19	1503-692	A-Arm, Front - Upper - Assembly - Green	2	(inc. 8-10 and 20-22)
20	0405-621	Boot	4	
21	1423-573	Circlip	2	
22	0404-693	Bearing	2	
23	1503-454	Knuckle, Front - Right - Assembly	1	(inc. 24-25)
23	1503-455	Knuckle, Front - Left - Assembly	1	(inc. 24-25)
24	1423-439	Ring, Snap	2	
25	2402-412	Bearing, Wheel	2	
26	0403-685	Shock Absorber	2	Dealer Serviced Only
27	1503-693	Spring, Suspension - Upper - White	2	
28	1503-694	Spring, Suspension - Lower - White	2	

2018 WILDCAT XX LTD EPS GREEN INTERNATIONAL [U2018RHX1POSS] - GAS TANK ASSEMBLY [302844]

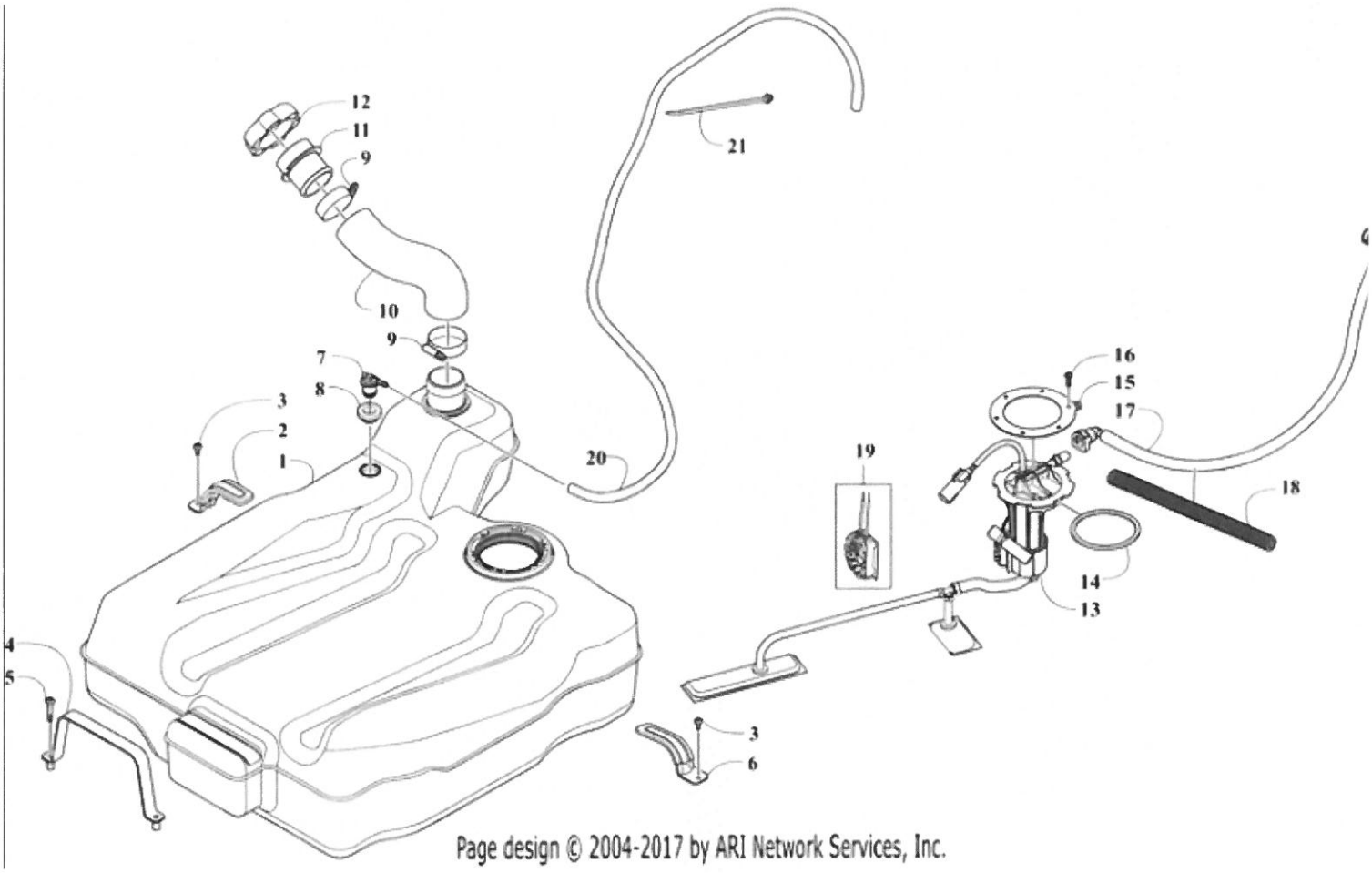

Ref #	Part #	Description	Qty	Context Note		
1	0570-482	Gas Tank	1			
2	0570-502	Bracket, Hold Down - Right	1			
3	8476-617	Screw	2		0.09	0.10
4	9506-154	Bracket, Hold Down - Front	1		5.58	11.95
5	8476-636	Screw, Machine	2		2.01	4.29
6	0570-503	Bracket, Hold Down - Left	1		1.91	2.10
7	1670-787	Valve, Check	1		3.04	3.34
8	2670-650	Grommet	1			
9	0624-390	Clamp, Hose	2		0.76	0.84
10	0410-401	Hose	1		32.66	35.93
11	0470-970	Neck, Fill	1		0.95	1.05
12	1470-185	Cap, Gas Tank	1		4.41	4.85
13	0570-501	Pump, Fuel Assembly	1		79.89	87.88
14	0470-838	Seal	1		0.39	0.43
15	2670-042	Plate, Retaining - Fuel Pump	1		9.44	10.38
16	0423-898	Screw, Self-Tapping	6		0.05	0.06
17	0570-500	Line, Fuel	1		39.71	84.95
18	3706-670	Conduit, Loom	1			
19	1770-170	Fuel Level Sensor Kit	1		15.69	17.26
20	0419-272	Hose, Vent	AR			
21	0623-677	Tie, Cable - Push Mount	1		0.14	0.15

2018 WILDCAT XX LTD EPS GREEN INTERNATIONAL [U2018RHX1POSS] - HYDRAULIC BRAKE ASSEMBLY [302830]

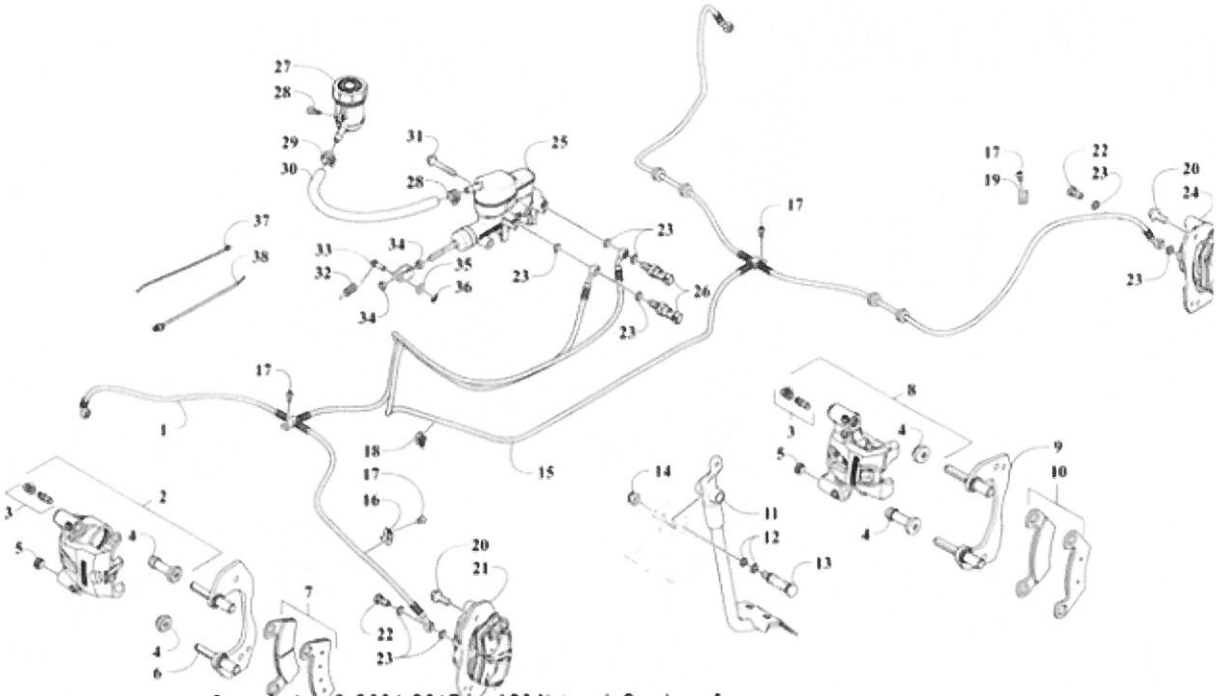

Page design © 2004-2017 by ARI Network Services, Inc.

Ref #	Part #	Description	Qty	Context Note
1	2402-458	Brakeline - Front	1	
2	2502-374	Kit, Caliper Assembly	1	Front - Right
2	2502-377	Kit, Caliper Assembly	1	Front - Left
3	2502-223	Kit, Bleeder	4	
4	2502-224	Kit, Boots	4	
5	2502-225	Kit, Jam Screw	4	
6	2502-376	Kit, Caliper Mounting Bracket	2	Front
7	2502-375	Kit, Brake Pads	2	Front
8	2502-378	Kit, Caliper Assembly	1	Rear - Right
8	2502-381	Kit, Caliper Assembly	1	Rear - Left
9	2502-380	Kit, Caliper Mounting Bracket	2	Rear
10	2502-379	Kit, Brake Pads	2	Rear
11	2502-424	Pedal, Brake	1	
12	1602-213	O-Ring	2	
13	0402-872	Axle	1	
14	8422-002	Nut, Lock	1	
15	2402-459	Brakeline - Rear	1	
16	0403-271	Clip, Routing	4	
17	1623-490	Screw, Cap	14	
18	1423-478	Clip	5	
19	2402-387	Clamp	8	
20	8409-026	Screw, Cap	8	
21	2502-294	Caliper, Brake	1	Front - Right
21	2502-295	Caliper, Brake	1	Front - Left
22	0423-413	Bolt, Banjo Fitting	4	
23	0423-178	Washer, Crush	12	
24	2502-296	Caliper, Brake	1	Rear - Right
24	2502-297	Caliper, Brake	1	Rear - Left
25	2502-612	Cylinder, Master Brake - Assembly	1	(inc. 27)
26	0409-224	Switch, Brake Pressure	2	
27	TBD	Resevoir	1	
28	0423-538	Screw, Self-Tapping	1	
29	TBD	Resevoir	1	
30	TBD	Resevoir	1	
31	8408-850	Screw, Cap	2	
32	1612-178	Spring	1	
33	2402-557	Pin, Clevis	1	
34	TBD	Resevoir	1	
35	8050-217	Washer	1	
36	1623-942	Clip	1	
37	0123-788	Tie, Cable - 8 in.	AR	
38	0623-677	Tie, Cable - Push Mount	AR	

2018 WILDCAT XX LTD EPS GREEN INTERNATIONAL [U2018RHX1POSS] - INTAKE MANIFOLD ASSEMBLY [302852]

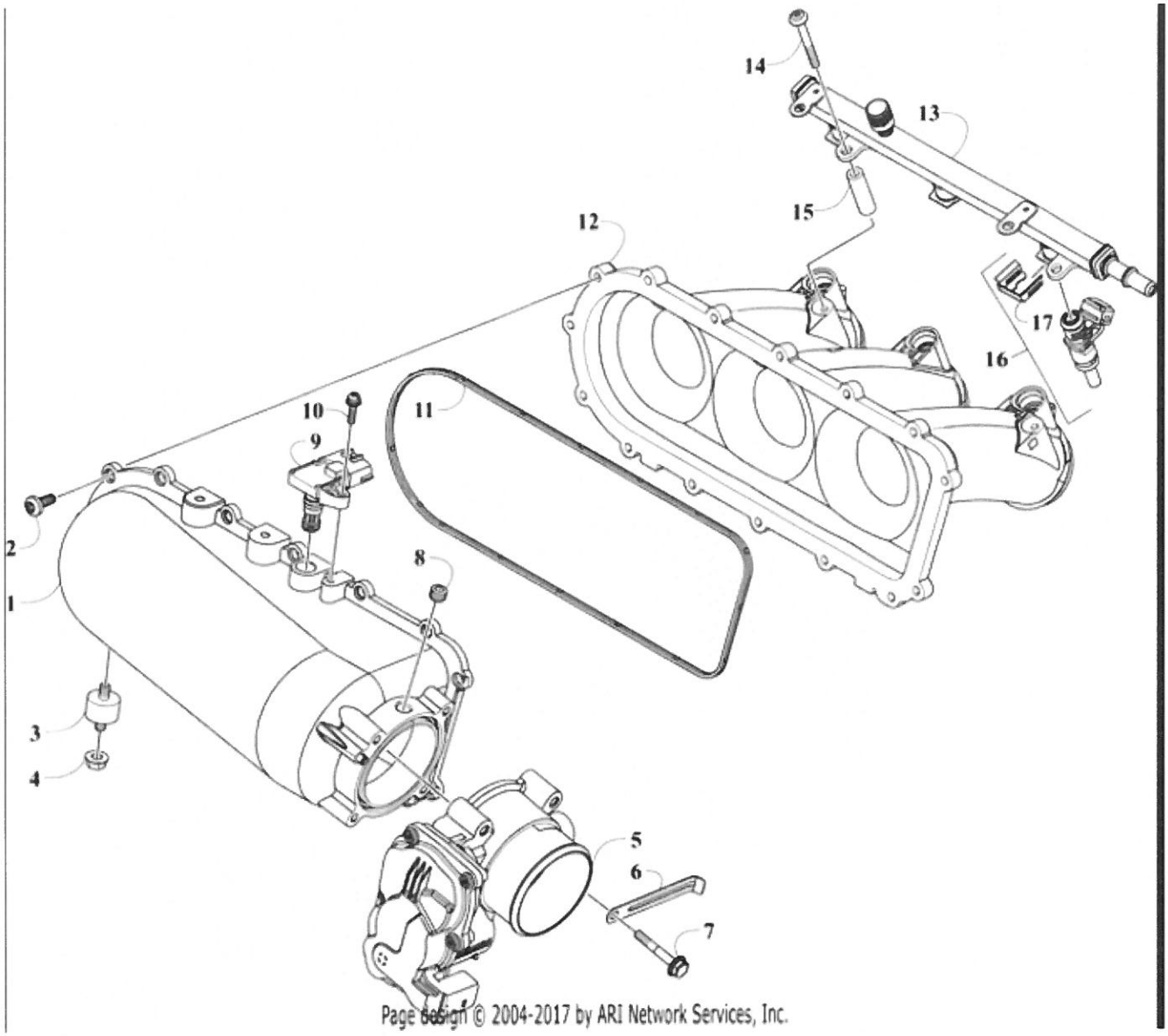

Ref #	Part #	Description	Qty	Context Note
1	0570-471	Manifold, Intake	1	
3	0831-104	Insulator	2	
12	0570-472	Manifold	1	
14	8476-546	Screw, Machine	2	
2	0423-396	Screw, Self Tapping	15	
4	8424-604	Nut	2	
17	0470-889	Clip, Retaining	3	
8	0801-002	Plug	1	
7	0826-005	Screw, Cap	4	
6	1623-984	Clamp, Routing	1	
10	1423-080	Screw, Machine	1	
15	1470-159	Bushing	2	
11	0830-225	Gasket, Cylinder Head	1	
9	0824-052	Sensor, T-MAP	1	
16	1470-143	Injector Assembly	3	(inc. 17)
5	1470-067	Body, Throttle Assembly	1	
13	1470-158	Rail, Fuel	1	

2018 WILDCAT XX LTD EPS GREEN INTERNATIONAL [U2018RHX1POSS] - MAGNETO AND COVER ASSEMBLY [302859]

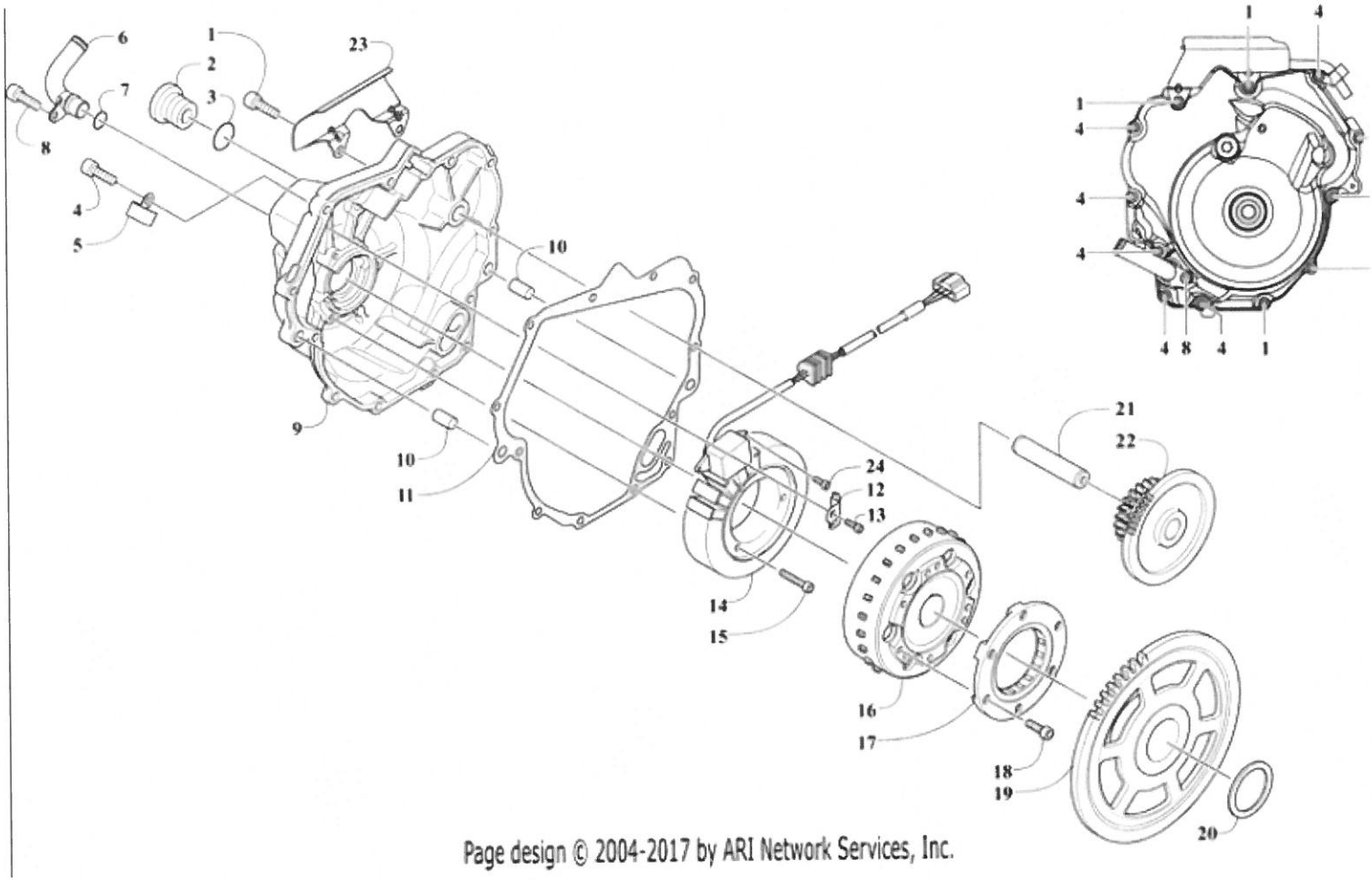

Page design © 2004-2017 by ARI Network Services, Inc.

Ref #	Part #	Description	Qty	Context Note
1	3021-912	Screw, Cap	3	
2	3021-910	Plug	1	
3	3020-347	O-Ring	1	
4	3020-314	Screw, Cap	9	
5	3020-350	Bracket, Retaining	1	
6	3021-834	Pipe, Oil	1	
7	3020-615	O-Ring	1	
8	3020-359	Screw, Cap	1	
9	3021-918	Cover, Magneto	1	
10	3020-293	Pin, Dowel	2	
11	3020-436	Gasket, Magneto Cover	1	
12	3020-620	Bracket, Retaining	1	
13	3020-354	Screw, Cap	1	
14	3021-914	Stator, Assembly	1	
15	3020-356	Screw, Cap	3	
16	3021-913	Rotor/Flywheel	1	
17	3020-457	Clutch, Starter - One-Way	1	
18	3020-359	Screw, Cap	6	
19	3020-360	Gear, Starter Clutch	1	
20	3020-361	Washer	1	
21	3020-362	Shaft, Idler Gear	1	
22	3020-456	Gear, Idler - Starter	1	
23	3021-911	Plate	1	
24	3020-621	Bolt	2	

2018 WILDCAT XX LTD EPS GREEN INTERNATIONAL [U2018RHX1POSS] - OIL PAN ASSEMBLY [302860]

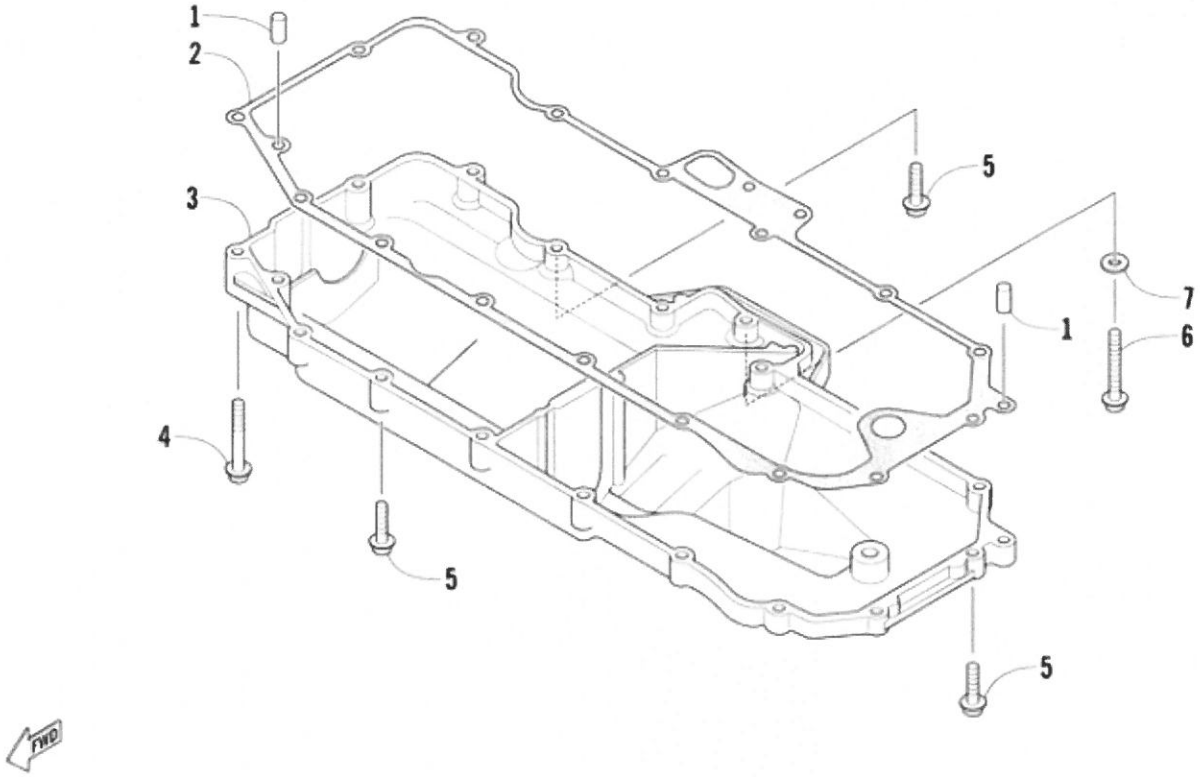

Page design © 2004-2017 by ARI Network Services, Inc.

Ref #	Part #	Description	Qty	Context Note
1	3020-293	Pin, Dowel	2	
2	3020-453	Gasket, Oil Pan	1	
3	3020-452	Pan, Oil	1	
4	3020-454	Screw, Cap	3	
5	3020-314	Screw, Cap	15	
6	3020-298	Plug, Drain	1	
7	3020-299	Gasket	1	

2018 WILDCAT XX LTD EPS GREEN INTERNATIONAL [U2018RHX1POSS] - OIL PUMP ASSEMBLY [106468]

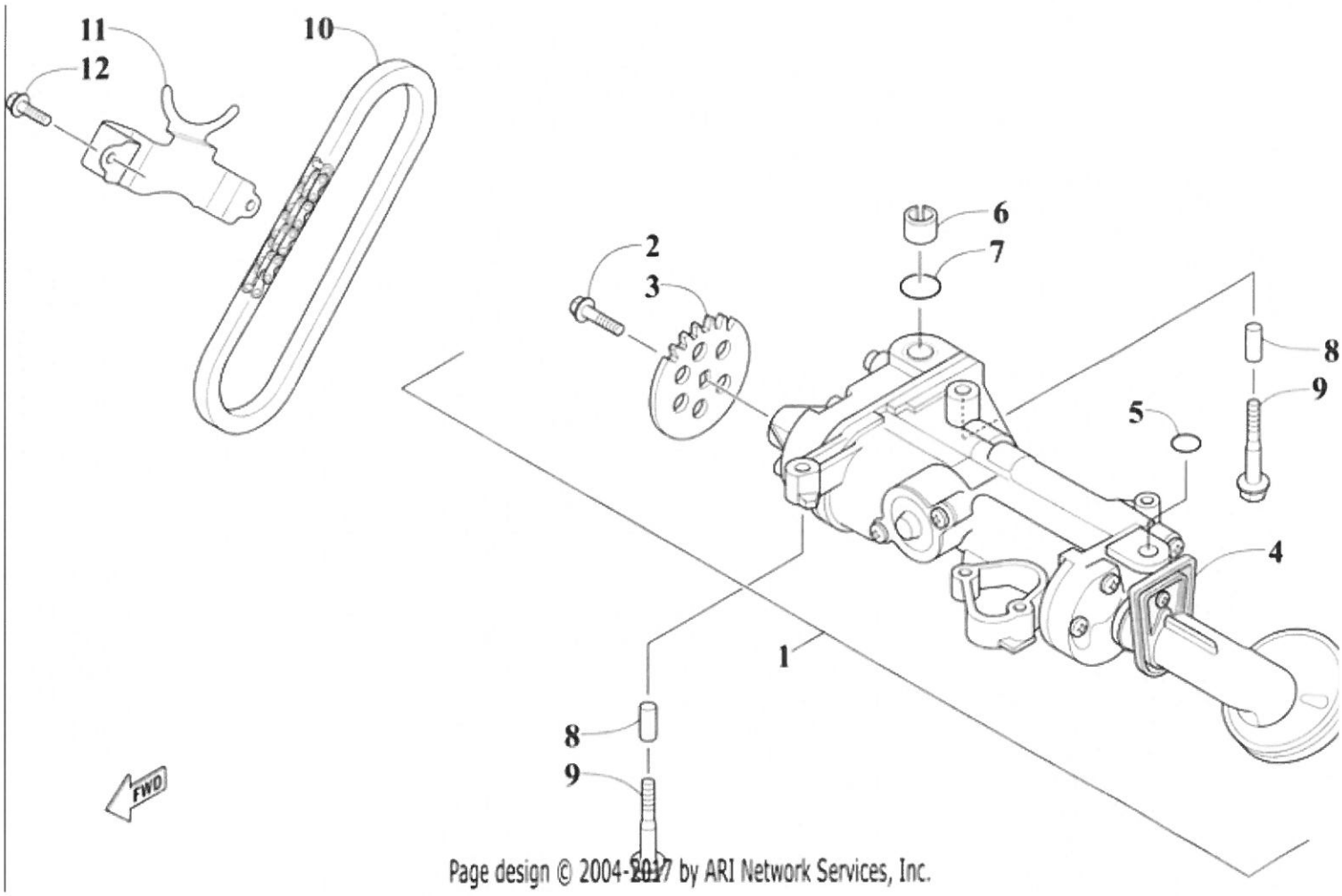

Ref #	Part #	Description	Qty	Context Note
1	3020-281	Pump, Oil - Assembly	1	(inc. 2-5)
2	3020-282	Screw, Cap	1	
3	3020-283	Sprocket	1	
4	3020-284	Isolator, Oil Strainer	1	
5	3020-285	O-Ring	1	
6	3020-286	Insert	1	
7	3020-287	O-Ring	1	
8	3020-288	Pin, Dowel	2	
9	3020-289	Screw, Cap	5	
10	3020-290	Chain	1	
11	3020-291	Bracket, Retainer - Chain	1	
12	3020-292	Screw, Cap	2	

2018 WILDCAT XX LTD EPS GREEN INTERNATIONAL [U2018RHX1POSS] - OIL SYSTEM ASSEMBLY [302840]

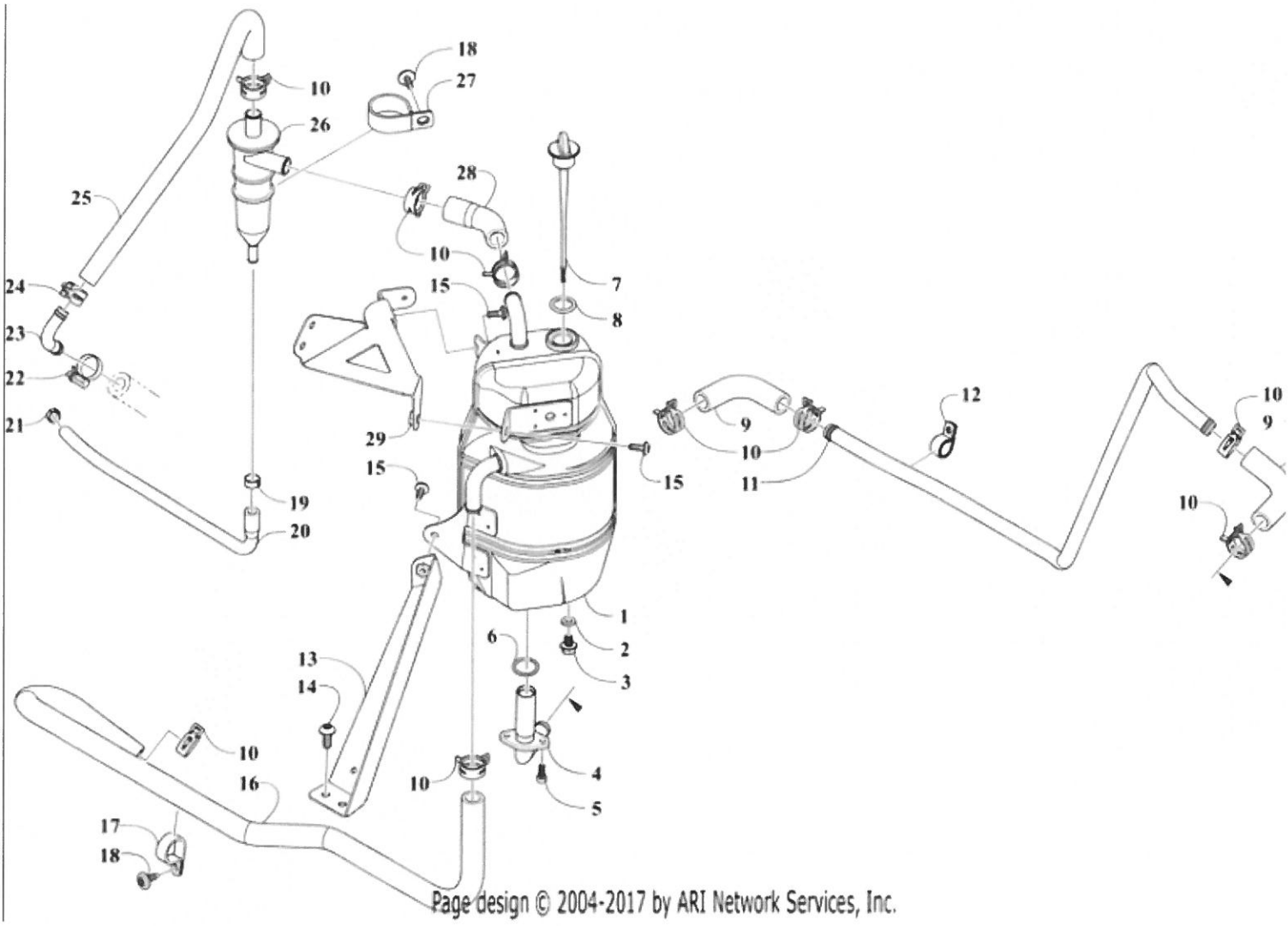

Ref #	Part #	Description	Qty	Context Note
1	3020-467	Tank, Oil	1	
2	3020-473	Gasket	1	
3	3020-472	Bolt	1	
4	3020-470	Pipe, Oil	1	
5	3020-167	Screw, Cap	2	
6	3020-471	O-Ring	1	
7	3020-468	Gauge, Oil Level	1	
8	3020-469	O-Ring	1	
9	0410-407	Hose, Oil Tank - Pipe	2	
10	1623-287	Clamp, Hose	9	
11	0410-408	Pipe, Oil Tank - Engine	1	
12	1623-068	Clamp	2	
13	6406-258	Bracket, Oil Tank - Lower	1	
14	0423-817	Screw, Machine	2	
15	8476-616	Screw, Machine	3	
16	0410-355	Hose, Oil - Engine - Tank	1	
17	0423-044	Clamp	2	
18	1423-198	Screw, Machine	2	
19	0610-581	Clamp, Hose	1	
20	0410-397	Hose, Oil - Seperator - Engine	1	
21	0610-415	Clamp, Hose	1	
22	2623-152	Clamp, Hose	1	
23	0410-360	Pipe, Oil - Seperator - Intake	1	
24	1623-283	Clamp, Hose	1	
25	0410-358	Hose, Oil - Seperator - Intake	1	
26	3020-482	Breather, Oil	1	
27	1423-541	Clamp	1	
28	0410-357	Hose, Oil - Seperator - Tank	1	
29	6406-257	Bracket, Oil Tank - Upper	1	

2018 WILDCAT XX LTD EPS GREEN INTERNATIONAL [U2018RHX1POSS] - PISTON AND CRANKSHAFT ASSEMBLY [302856]

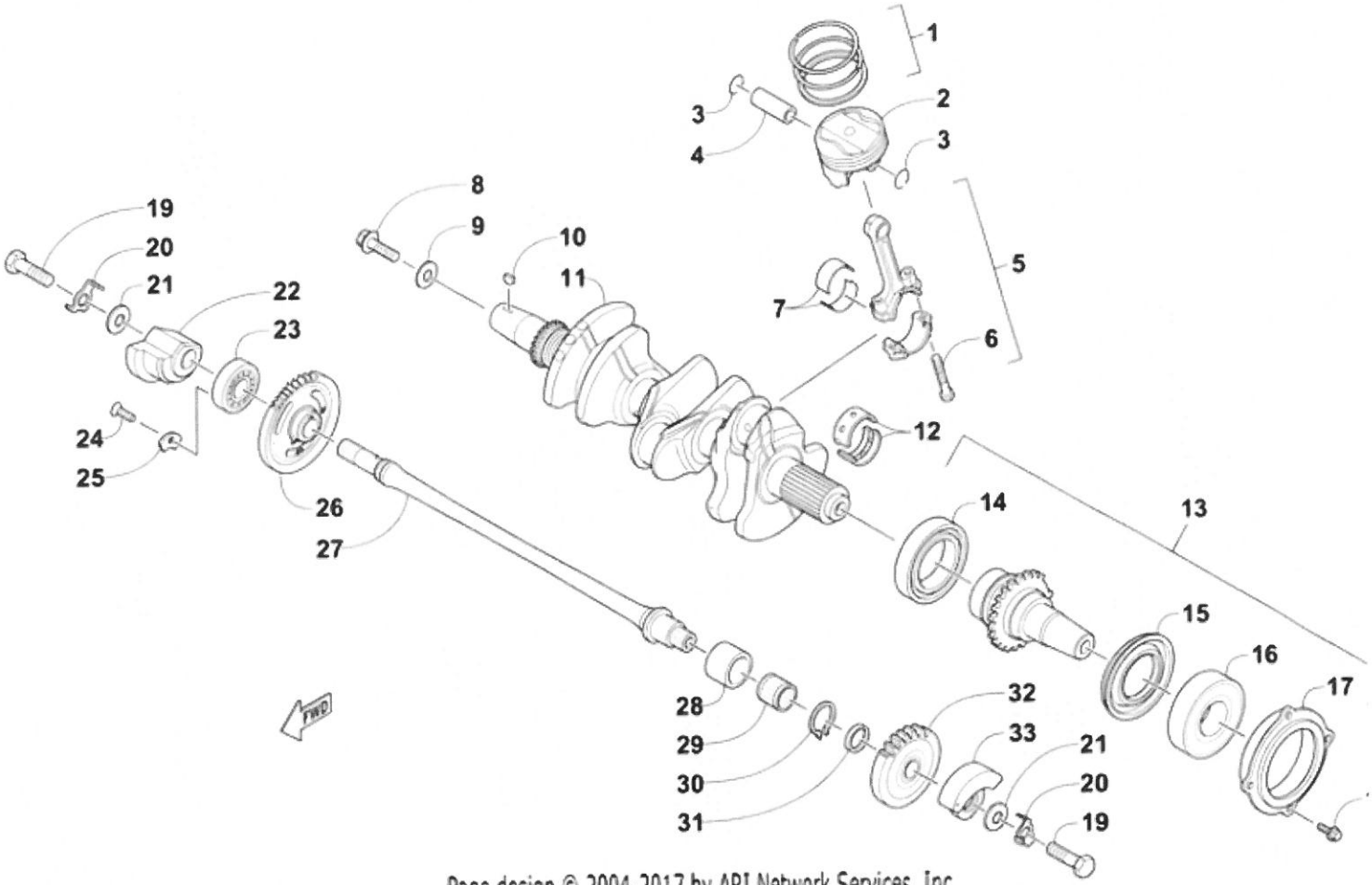

Page design © 2004-2017 by ARI Network Services, Inc.

Ref #	Part #	Description	Qty	Context Note
1	3021-876	Ring Set, Piston	3	
2	3021-875	Piston	3	
3	3020-192	Circlip	6	
4	3020-428	Pin, Piston	3	
5	3021-874	Rod, Connecting - Assembly	3	(inc. 6)
6	3020-195	Screw, Cap	6	
7	3020-198	Bearing, Connecting Rod - Blue	6	
7	3020-199	Bearing, Connecting Rod - Black	6	
7	3020-200	Bearing, Connecting Rod - Brown	6	
7	3020-201	Bearing, Connecting Rod - Green	6	
7	3020-202	Bearing, Connecting Rod - Yellow	6	
7	3020-425	Bearing, Connecting Rod - Pink	6	
8	3020-203	Screw, Cap	1	
9	3020-204	Washer	1	
10	3020-206	Key	1	
11	3020-422	Crankshaft Assembly	1	
12	3020-208	Bearing, Crankshaft - Black	8	
12	3020-209	Bearing, Crankshaft - Brown	8	
12	3020-210	Bearing, Crankshaft - Green	8	
12	3020-211	Bearing, Crankshaft - Yellow	8	
12	3020-212	Bearing, Crankshaft - Pink	8	
12	3020-213	Bearing, Crankshaft - Red	8	
12	3020-214	Bearing, Crankshaft - White	8	
13	3021-877	Shaft, Output - Assembly	1	(inc. 14-17)
14	3020-216	Bearing	1	
15	3020-217	Seal	1	
16	3021-878	Bearing	1	
17	3020-430	Housing, Bearing	1	
18	3020-220	Screw, Cap	4	
19	3020-221	Screw, Cap	2	
20	3020-222	Washer, Tab	2	
21	3020-223	Washer	2	
22	3020-433	Counterweight	1	
23	3020-225	Bearing	1	
24	3020-226	Screw, Machine	1	
25	3020-227	Plate, Retaining	1	
26	3020-432	Gear, Balancer	1	
27	3020-431	Shaft, Balancer	1	
28	3020-230	Housing, Bearing	1	
29	3020-231	Bearing	1	
30	3020-232	Circlip	1	
31	3020-233	Spacer	1	
32	3020-234	Gear, Drive	1	
33	3020-235	Counterweight	1	

2018 WILDCAT XX LTD EPS GREEN INTERNATIONAL [U2018RHX1POSS] - REAR SUSPENSION ASSEMBLY [302871]

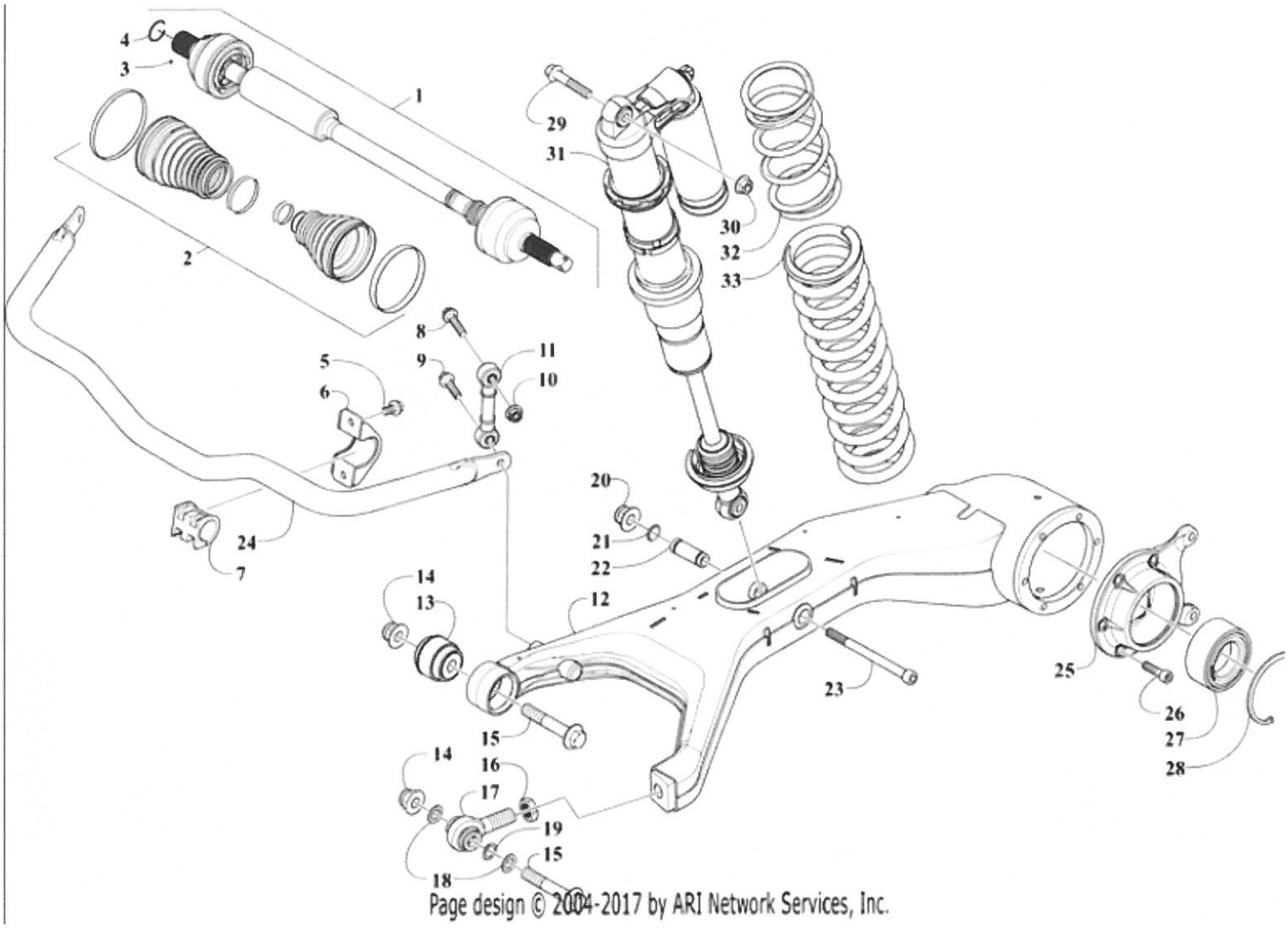

Ref #	Part #	Description	Qty	Context Note
1	2502-709	Kit, Halfshaft	2	(inc. 2-4)
2	0	Not A Serviceable Item	2	-PN TBD
3	0	Not A Serviceable Item	2	-PN TBD
4	0	Not A Serviceable Item	2	-PN TBD
5	8409-021	Screw, Cap	4	
6	1504-502	Clamp, Sway Bar Bushing	2	
7	0404-712	Bushing, Sway Bar	2	
8	8409-045	Screw, Cap	2	
9	8409-036	Screw, Cap	2	
10	1423-334	Nut, Lock	2	
11	0404-302	Link, Sway Bar	2	
12	1504-490	Arm, Trailing - Green	2	(inc. 13, 16-17, and 25-28)
13	0404-696	Bearing	2	
14	1423-436	Nut, Lock	4	
15	1423-437	Bolt	4	
16	1423-605	Nut	2	
17	0405-626	Rod, End	2	
18	1623-794	Washer	4	
19	0645-752	Washer, Thrust	2	
20	1423-184	Nut, Lock	2	
21	0423-299	O-Ring - 016 (5/8 x 3/4 x 1/16)	4	
22	0404-722	Sleeve	2	
23	1423-448	Screw	2	
24	1504-445	Sway Bar, Rear	1	
25	1504-443	Housing, Wheel Bearing - Assembly	2	(inc. 27-28)
26	1423-093	Screw, Cap	12	
27	2402-412	Bearing, Wheel	2	
28	1423-439	Ring, Snap	2	
29	8415-265	Screw, Cap	2	
30	1423-390	Nut, Lock	2	
31	0404-707	Shock - Rear	2	
32	1503-695	Spring, Suspension - Upper - White	2	
33	1504-510	Spring, Suspension - Lower - White	2	

2018 WILDCAT XX LTD EPS GREEN INTERNATIONAL [U2018RHX1POSS] - ROPS ASSEMBLY [302868]

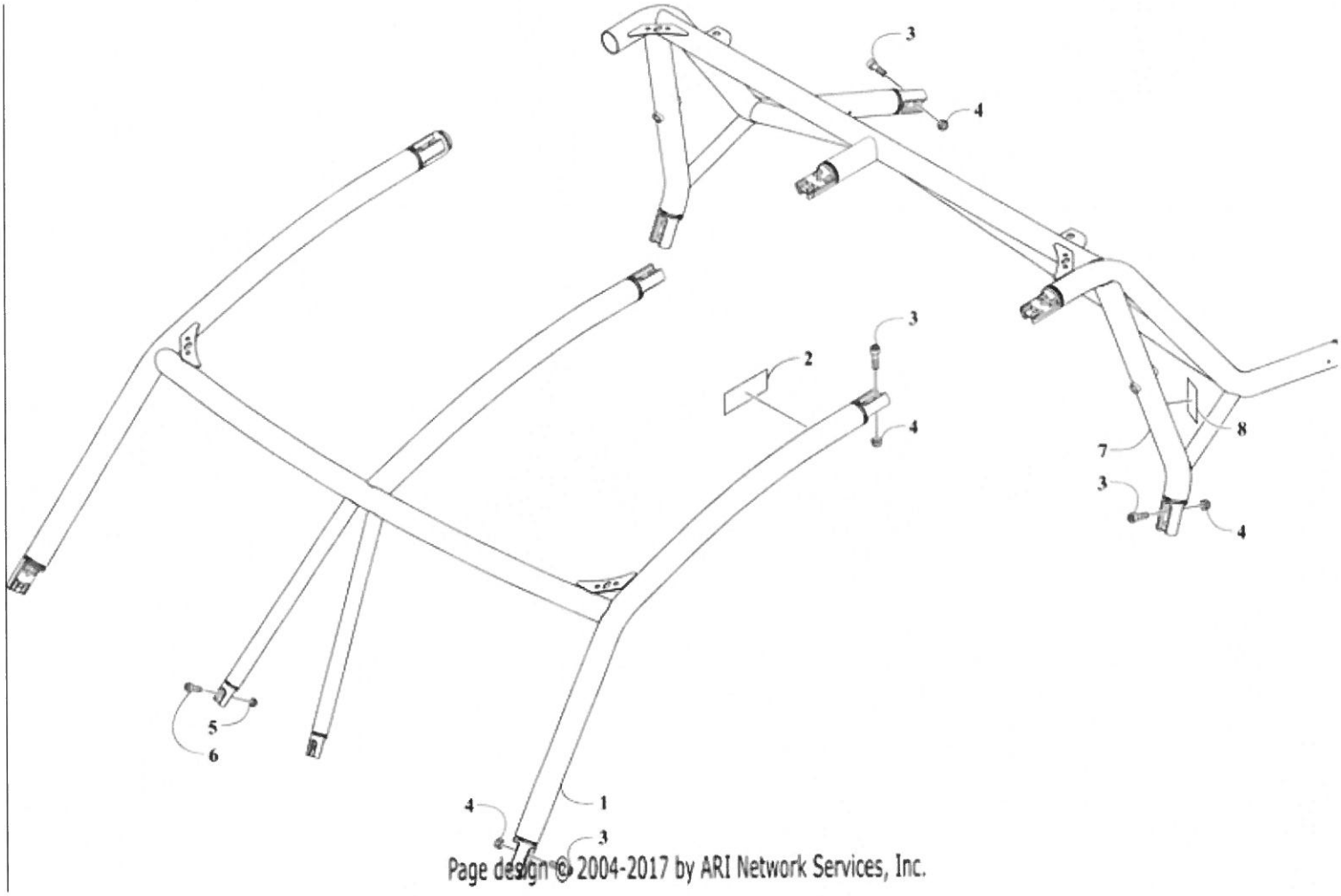

Ref #	Part #	Description	Qty	Context Note
1	9506-265	ROPS - Front Assembly	1	(inc. 2)
2	3411-251	Decal, Warning - Handhold	2	
3	1423-140	Screw, Cap	18	
4	1423-161	Nut, Lock	18	
5	0624-250	Nut, Lock	2	
6	1623-582	Screw, Cap	2	
7	9506-267	ROPS- Rear Assembly	1	(inc. 8)
8	3411-970	Decal, Warning - ROPS	1	

2018 WILDCAT XX LTD EPS GREEN INTERNATIONAL [U2018RHX1POSS] - SEAT AND SEAT BELT ASSEMBLY [302821]

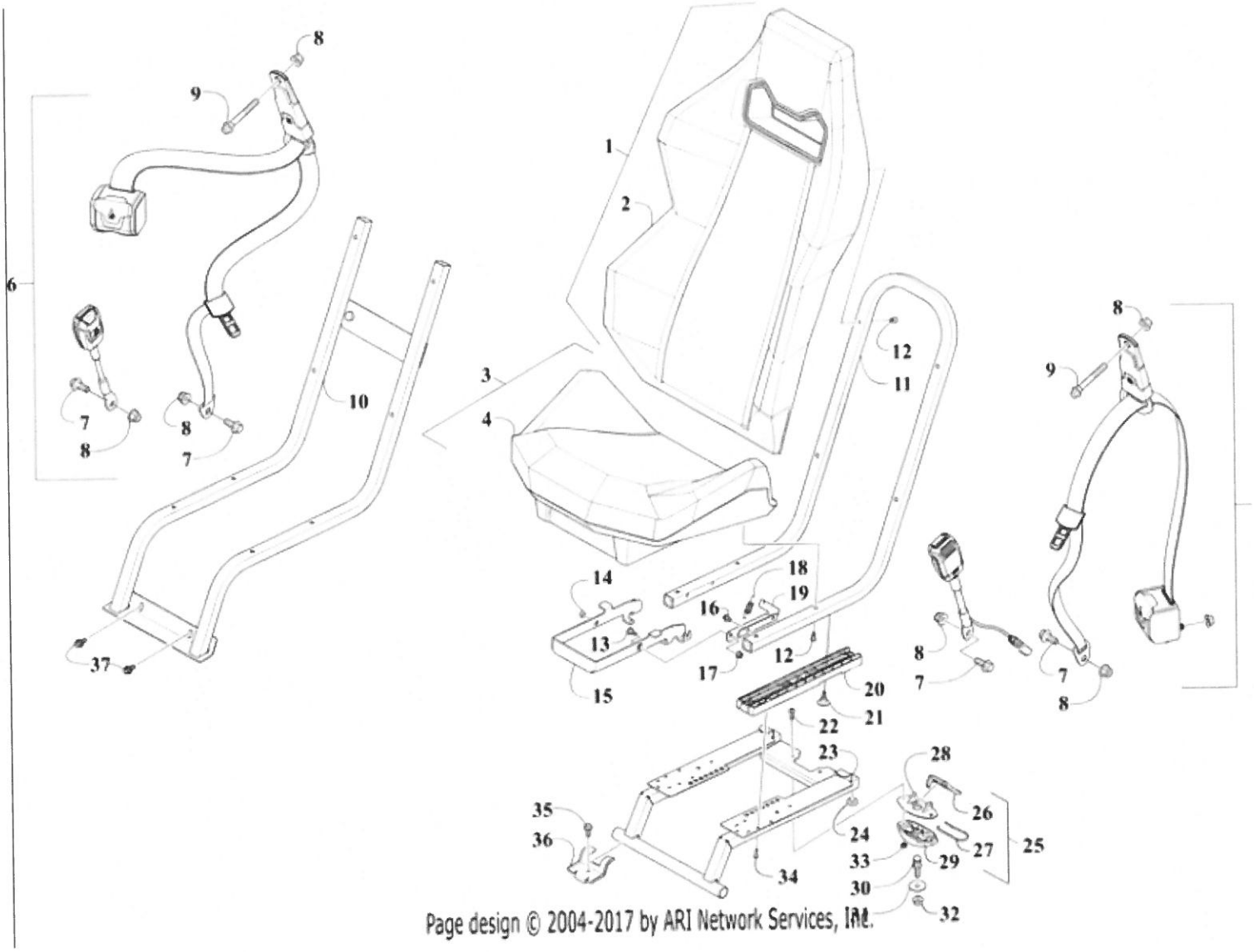

Page design © 2004-2017 by ARI Network Services, Inc.

Ref #	Part #	Description	Qty	Context Note
2	9506-153	Cover, Seat Back	2	
4	9506-152	Cover, Seat Base	2	
15	9506-292	Handle, Adjustment - Assembly	1	(inc. 14)
33	0623-038	Nut w/Washer	2	
35	8408-821	Screw, Cap	2	
12	8468-617	Screw, Machine	16	
17	8427-605	Nut	2	
22	8468-620	Screw, Machine	2	
34	1623-933	Screw, Self-Tapping	8	
37	8408-816	Screw, Cap	2	
16	8408-613	Screw, Cap	4	
32	8424-002	Nut	1	
27	0673-023	Clip, Spring	1	
8	1423-184	Nut, Lock	6	
14	1423-517	Bushing	2	
31	0423-073	Washer	1	
18	1612-178	Spring	2	
24	0406-877	Bumper	2	
7	1423-182	Screw, Cap	4	
13	1423-220	Screw, Shoulder	2	
30	1423-254	Stud, Latch - Seat	1	
29	1673-634	Seat Latch	1	
21	1423-518	Screw, Shoulder	4	
26	2606-854	Lever, Seat Latch	1	
28	1673-635	Cover, Seat Latch	1	
19	7406-056	Bracket, Seat Adjustment - Right	1	
20	7406-057	Bracket, Seat Adjustment - Left	1	
36	5506-078	Bracket, Hold-Down	2	
25	2706-164	Latch, Seat - Assembly	1	(inc. 26-29)
20	6406-573	Base, Seat Adjustment	2	
9	1423-449	Screw, Shoulder	2	
11	9506-191	Mount, Seat	1	
6	7506-700	Belt, Seat	1	
3	9506-150	Base, Seat	2	
5	7506-390	Belt, Seat - Wired - Driver Side	1	
1	9506-151	Back, Seat	2	
10	8506-325	Frame, Seat - Passenger	1	
23	9506-140	Frame, Seat - Lower - Driver	1	

2018 WILDCAT XX LTD EPS GREEN INTERNATIONAL [U2018RHX1POSS] - SHIFTER ASSEMBLY [302831]

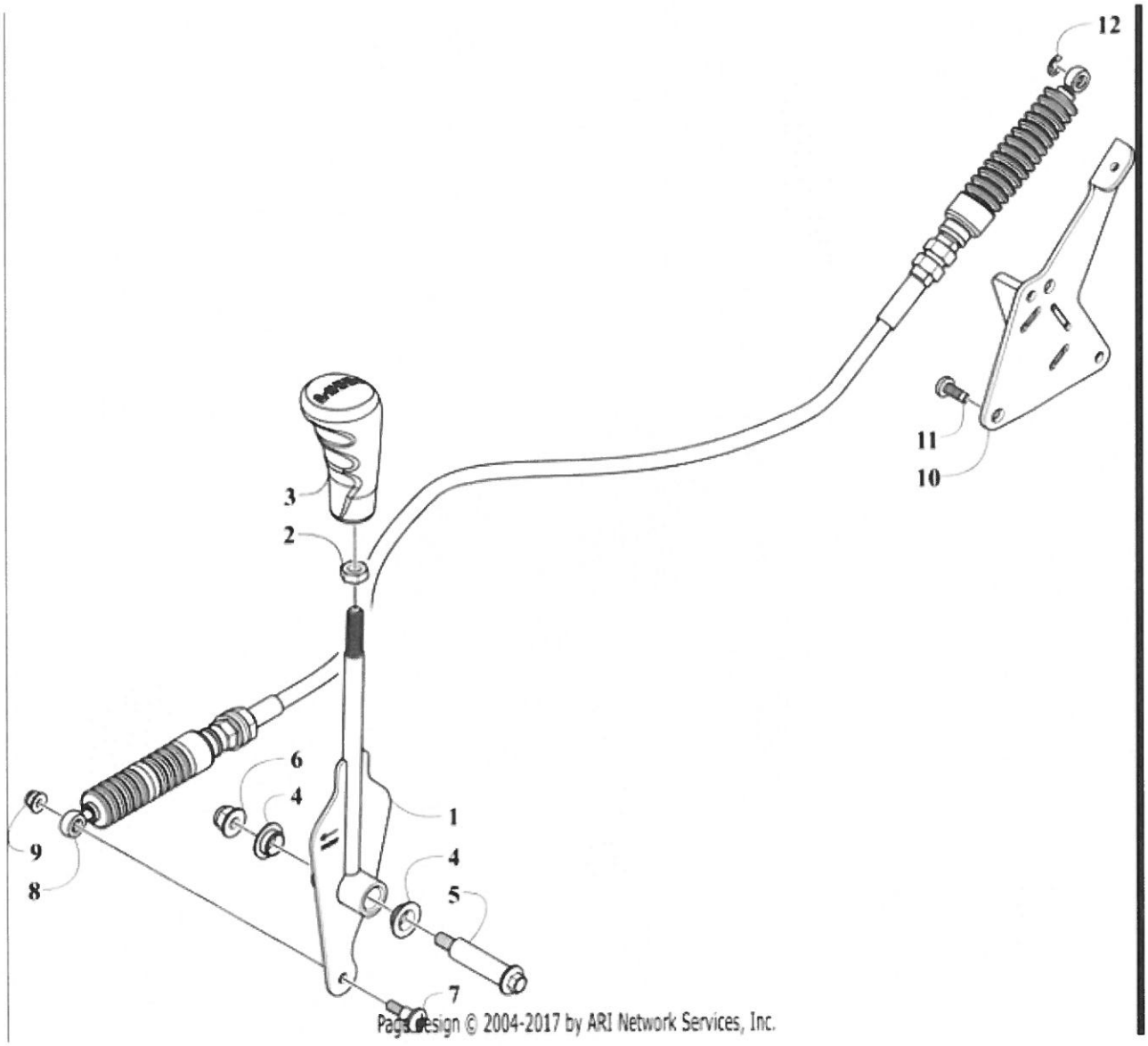

Page design © 2004-2017 by ARI Network Services, Inc.

Ref #	Part #	Description	Qty	Context Note
8	0487-102	Cable, Shift	1	
1	2502-453	Lever, Shift	1	
3	2402-123	Knob, Shift	1	
10	0508-035	Bracket, Shift Cable	1	
4	2402-213	Bushing	2	
5	0423-505	Screw, Shoulder	1	
2	0423-885	Nut	1	
7	0423-356	Screw, Shoulder	1	
6	8427-802	Nut, Lock	1	
11	0423-538	Screw, Self-Tapping	3	
9	8427-603	Nut, Lock	1	
12	0124-057	E-Ring	1	

2018 WILDCAT XX LTD EPS GREEN INTERNATIONAL [U2018RHX1POSS] - STARTER MOTOR ASSEMBLY [302857]

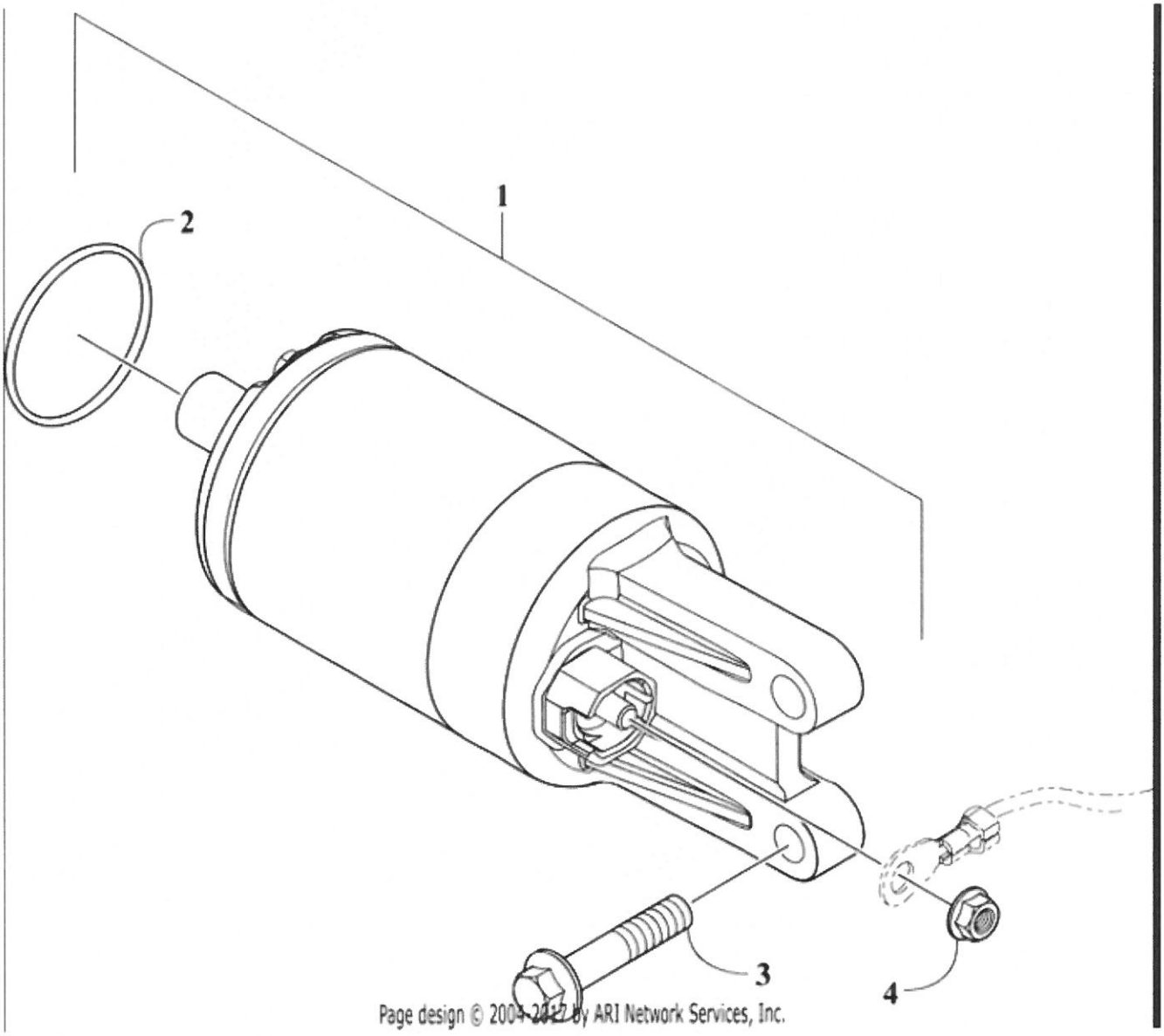

Ref #	Part #	Description	Qty	Context Note
4	0623-038	Nut w/Washer	1	
3	3020-163	Screw, Cap	2	
2	3020-365	O-Ring	1	
1	3021-915	Motor, Starter - Assembly	1	(inc. 2)

2018 WILDCAT XX LTD EPS GREEN INTERNATIONAL [U2018RHX1POSS] - STEERING ASSEMBLY [302826]

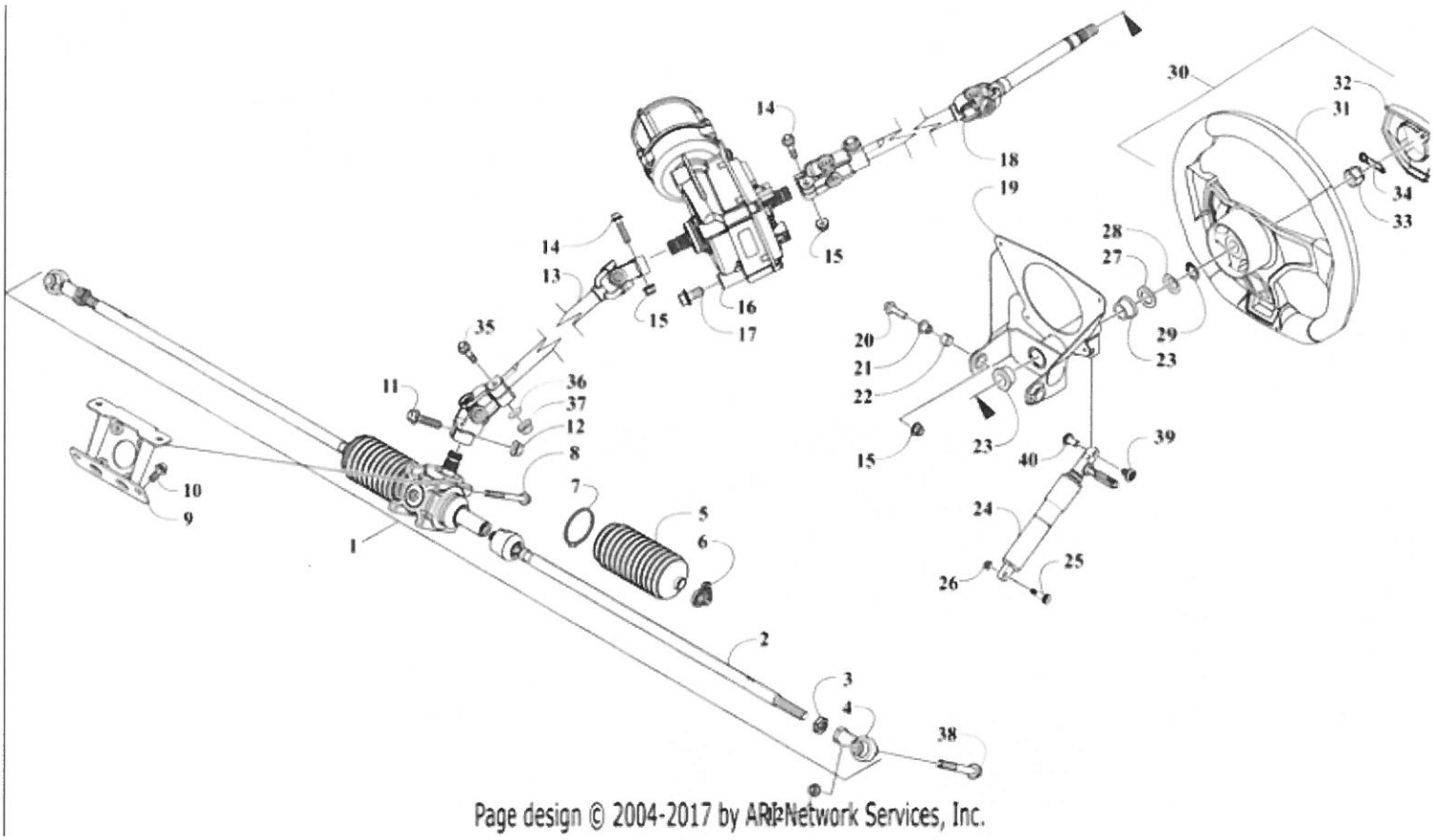

Ref #	Part #	Description	Qty	Context Note
3	1423-597	Nut, Jam	2	
30	2502-346	Wheel, Steering - Assembly	1	(inc. 31-32)
26	0623-056	Nut, Lock	1	
20	8408-831	Screw, Cap	2	
15	8427-802	Nut, Lock	2	
29	1423-110	Ring, Retaining	1	
37	8422-002	Nut, Lock	1	
39	8477-610	Screw, Machine	1	
21	0423-669	Spacer	2	
10	8409-821	Screw, Cap	4	
12	1423-334	Nut, Lock	3	
17	8409-020	Screw, Cap	4	
7	0405-505	Clamp, Bellow - Large	2	
34	1423-045	Clip, Retaining	1	
14	8408-835	Screw, Cap	2	
35	8409-045	Screw, Cap	1	
11	8409-040	Screw, Cap	1	
27	0423-558	Washer	1	
38	8409-075	Screw, Cap	2	
6	0405-504	Clamp, Bellow - Small	2	
36	8450-157	Washer	1	
23	0405-473	Bushing	2	
25	1423-250	Screw, Shoulder	1	
22	0405-405	Bushing	2	
28	0828-071	Washer	1	
33	0423-884	Nut	1	
5	0405-487	Bellow, Driver Side	2	
40	1423-569	Screw, Binding Barrel	1	
8	8408-890	Screw, Cap	4	
32	0405-620	Cover, Steering Wheel	1	
24	0405-468	Lift, Support	1	
31	0405-572	Wheel, Steering	1	
9	9506-217	Bracket, Steering Rack	1	
13	0405-596	Shaft, Lower	1	
18	0405-595	Shaft, Upper	1	
4	0405-623	Tie Rod End, Outer	2	
2	0405-624	Tie Rod End, Inner	2	
19	1505-006	Tilt Steering - Sub Assembly	1	(inc. 22-23)
1	1505-015	Rack and Pinion - Assembly	1	(inc. 2-7)
16	0505-997	Assembly, Electronic Power Steering	1	

2018 WILDCAT XX LTD EPS GREEN INTERNATIONAL [U2018RHX1POSS] - TRANSAXLE ASSEMBLY [302838]

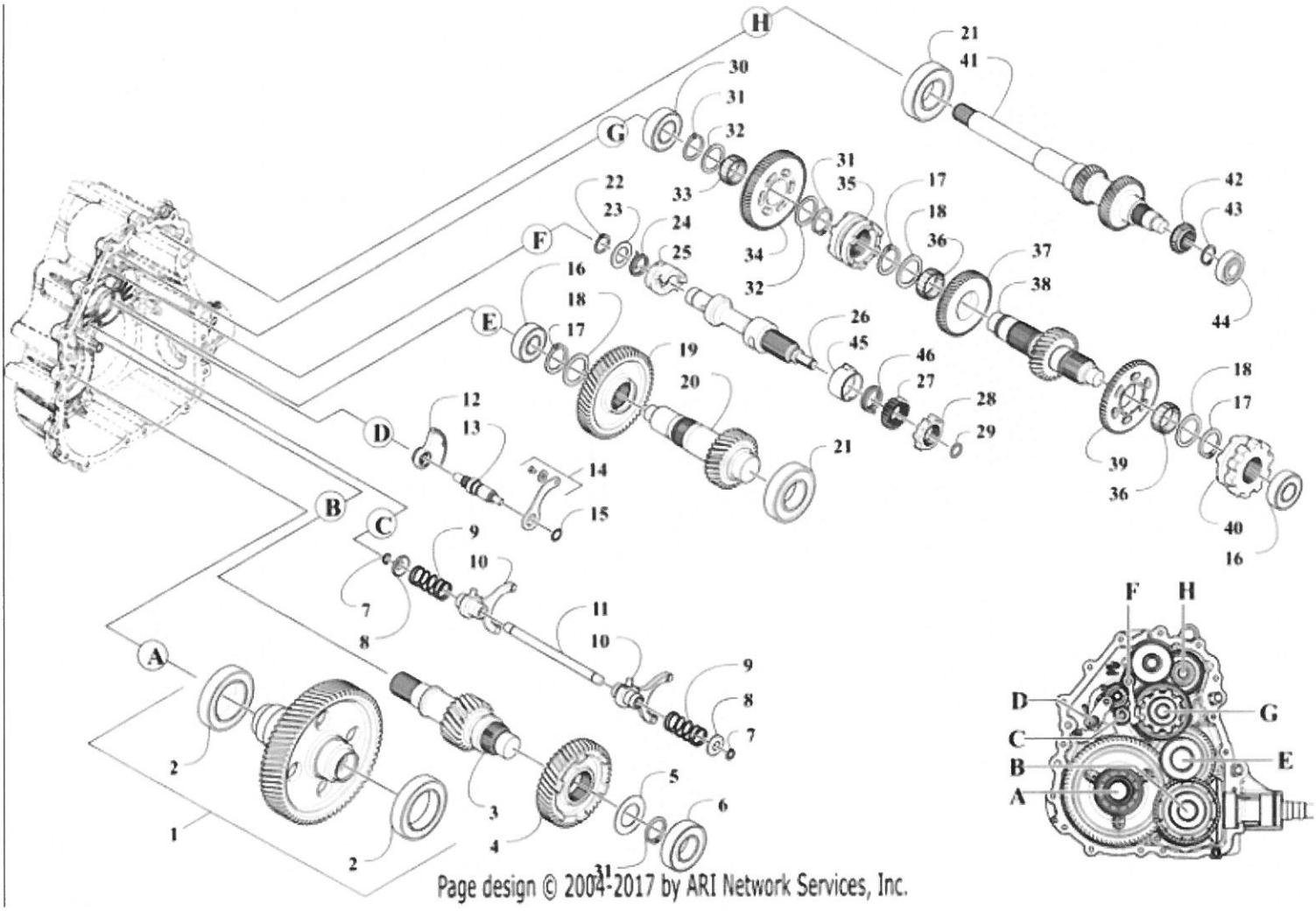

Page design © 2004-2017 by ARI Network Services, Inc.

Ref #	Part #	Description	Qty	Context Note
1	0817-047	Output, Gear - Assembly	1	(inc. 2)
2	0817-029	Bearing	2	
3	0817-052	Shaft, Gear - 22T	1	
4	0817-059	Gear - 46T	1	
5	0817-010	Washer	1	
6	0817-030	Bearing	1	
7	0817-016	Ring, Retaining	2	
8	0817-008	Washer	2	
9	0817-085	Spring	2	
10	0817-062	Fork, Shift	2	
11	0817-050	Rail, Shift Shaft	1	
12	0817-043	Gear - 47T	1	
13	0817-105	Shaft, Shift	1	
14	0817-066	Pawl	1	
15	0817-074	O-Ring	1	
16	0817-027	Bearing	2	
17	0817-018	Ring, Snap	3	
18	0817-009	Washer	3	
19	0817-060	Gear - 52T	1	
20	0817-046	Shaft, Idler - 29T	1	
21	0817-031	Bearing	2	
22	0817-020	Ring	1	
23	0817-063	Spacer	1	
24	0817-084	Spring	1	
25	0818-168	Cam	1	
26	0817-083	Drum, Shift	1	
27	0817-042	Gear - 52T	1	
28	0817-044	Star, Detent	1	
29	0817-073	O-Ring	1	
30	0817-028	Bearing	1	
31	0817-017	Ring, Retaining	3	
32	0817-022	Washer	2	
33	0817-032	Bearing	1	
34	0817-056	Gear - 66T	1	
35	0817-058	Engagement Dog, 6 Face	1	
36	0817-026	Bearing	2	
37	0817-054	Gear - 53T	1	
38	0817-049	Shaft, Reverse - 27T	1	
39	0817-096	Gear - 61T	1	
40	0817-053	Shift Dog, Park	1	
41	0817-021	Shaft, Input	1	
42	0817-095	Gear - 25T	1	
43	0817-013	Ring, Retaining	1	
44	0817-033	Bearing	1	
45	0817-127	Cam	1	

Ref #	Part #	Description	Qty	Context Note
46	0817-129	Spring	1	

2018 WILDCAT XX LTD EPS GREEN INTERNATIONAL [U2018RHX1POSS] - TRANSAXLE CASE/COVER [302837]

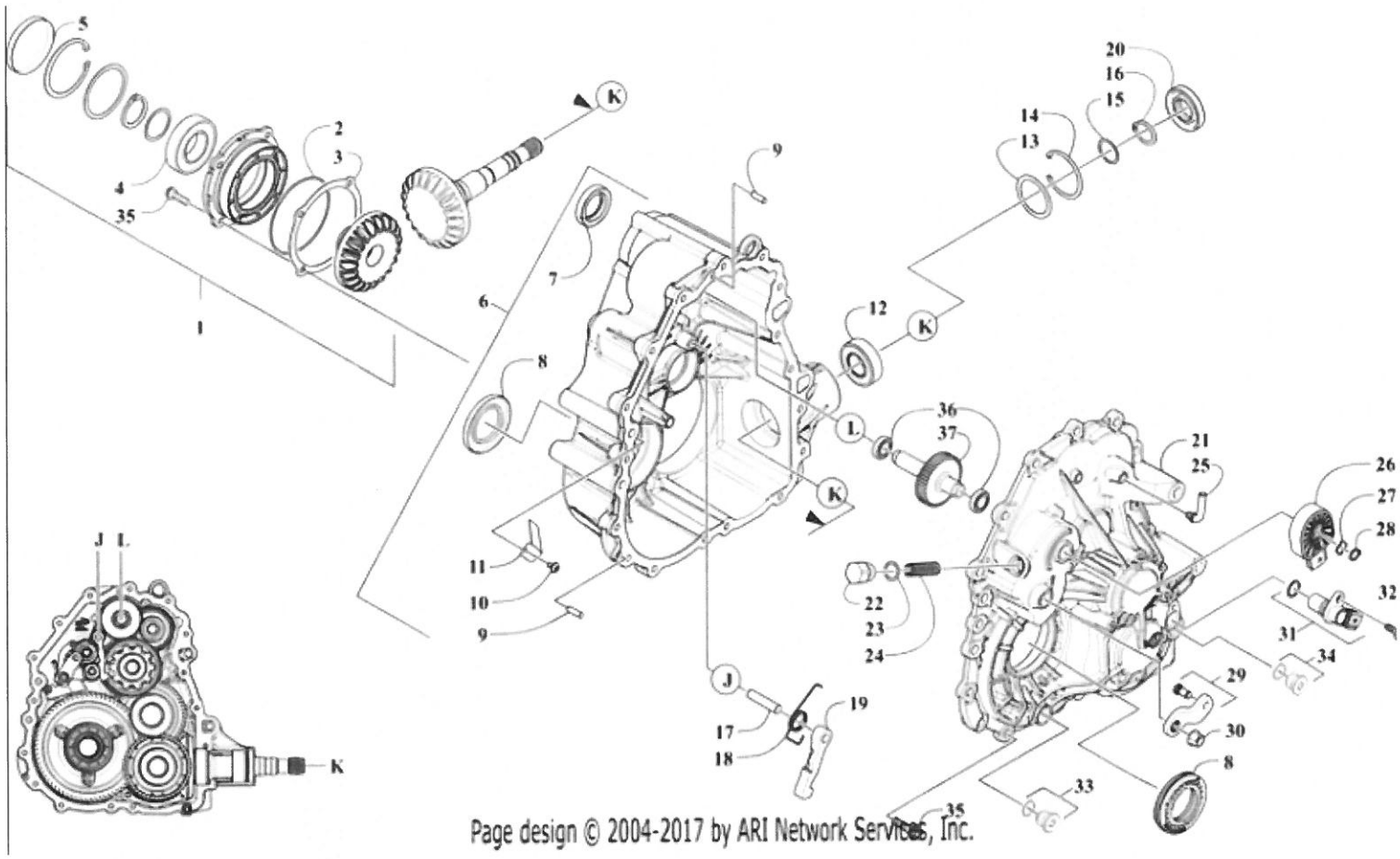

Page design © 2004-2017 by ARI Network Services, Inc.

Ref #	Part #	Description	Qty	Context Note
1	0817-099	Pinion, Assembly	1	(inc. 2-5)
2	0817-081	O-Ring	1	
3	0817-104	Kit, Shim	1	
4	0817-078	Bearing	1	
5	0817-080	Plug	1	
6	3333-048	Case, Assembly	1	(inc. 7-17)
7	3333-049	Seal, 30 X 47 X 8	1	
8	3333-046	Seal, 45 X 70 X 7	1	
9	0817-077	Pin, Dowel	2	
10	0817-004	Screw, Self-Tapping	1	
11	0817-103	Deflector, Oil	1	
12	0817-090	Bearing	1	
13	0817-024	Kit, Shim	1	
14	0817-015	Ring, Retaining	1	
15	0817-023	Kit, Shim	1	
16	0817-017	Ring, Retaining	1	
17	0817-011	Pin, Dowel	1	
18	0817-038	Spring	1	
19	0817-087	Pawl, Park	1	
20	0817-101	Seal	1	
21	0817-092	Cover, Case	1	
22	0817-065	Plug	1	
23	0817-075	O-Ring	1	
24	0817-036	Spring	1	
25	0817-051	Fitting, Elbow	1	
26	0409-202	Switch, Gear	1	
27	0817-037	Spring	1	
28	0817-019	Ring, Retaining	1	
29	0817-067	Kit, Bell Crank	1	
30	0817-007	Nut, Lock	1	
31	0430-121	Sensor, Speedometer	1	
32	0817-006	Screw, Speed	1	
33	0817-003	Plug	1	
34	0817-002	Plug	1	
35	0817-005	Screw, Hex	21	
36	0817-091	Bearing	2	
37	0817-102	Gear - 45T	1	

2018 WILDCAT XX LTD EPS GREEN INTERNATIONAL [U2018RHX1POSS] - WATER PUMP AND THERMOSTAT ASSEMBLY [302858]

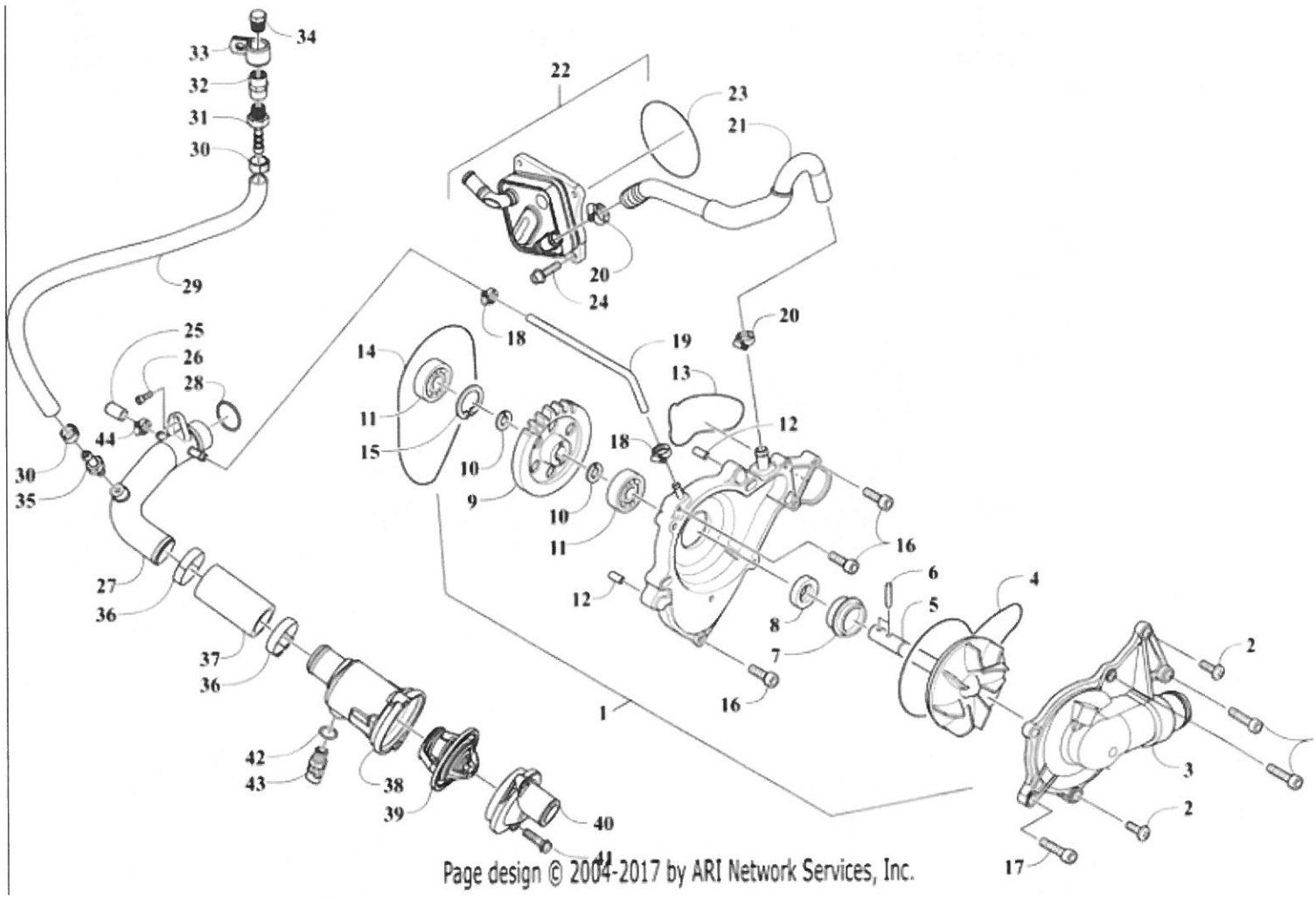

Ref #	Part #	Description	Qty	Context Note
1	3021-879	Pump, Water - Assembly	1	(inc. 2-10 and one No. 11)
2	3020-301	Screw, Machine	3	
3	3021-931	Cover, Housing	1	
4	3020-303	Seal, Housing Cover	1	
5	3020-304	Impeller/Shaft Assembly	1	
6	3020-305	Pin, Dowel	2	
7	3020-306	Seal, Mechanical	1	
8	3020-307	Seal, Oil	1	
9	3020-308	Gear	1	
10	3020-309	Ring, Retaining	2	
11	3020-310	Bearing	2	
12	3020-293	Pin, Dowel	2	
13	3020-311	Seal	1	
14	3020-312	Seal	1	
15	3020-313	Ring, Retaining	1	
16	3020-314	Screw, Cap	3	
17	3020-315	Screw, Cap	4	
18	3020-316	Clamp, Hose	4	
19	3021-890	Hose, 5	1	
20	3020-318	Clamp, Hose	4	
21	3021-901	Hose, Coolant - Water Pump/Oil Cooler	1	
22	3021-906	Cooler, Oil - Assembly	1	(inc. 23)
23	3020-321	O-Ring	1	
24	3020-322	Screw, Cap	4	
25	0413-411	Cap	1	
26	3021-900	Screw, Cap	1	
27	3021-889	Fitting, Elbow	1	
28	3020-325	O-Ring	1	
29	0410-406	Hose, Bleed - Tank	1	
30	0610-419	Clamp, Hose	2	
31	1470-227	Fitting, Hose	1	
32	1470-223	Fitting, Union	1	
33	1423-616	Clamp	1	
34	1470-229	Plug	1	
35	1470-228	Fitting, Hose	1	
36	3021-893	Clamp, Hose	2	
37	3021-892	Hose, 7	1	
38	3021-882	Housing, Thermostat	1	
39	3021-883	Thermostat	1	
40	3021-884	Cover, Thermostat	1	
41	3021-888	Screw, Cap	2	
42	3021-887	Washer, Plate	1	
43	3021-886	Thermostat Sensor Assembly	1	

Ref #	Part #	Description	Qty	Context Note
44	2623-062	Clamp, Hose	1	

2018 WILDCAT XX LTD EPS GREEN INTERNATIONAL [U2018RHX1POSS] - WHEEL AND TIRE ASSEMBLY [302829]

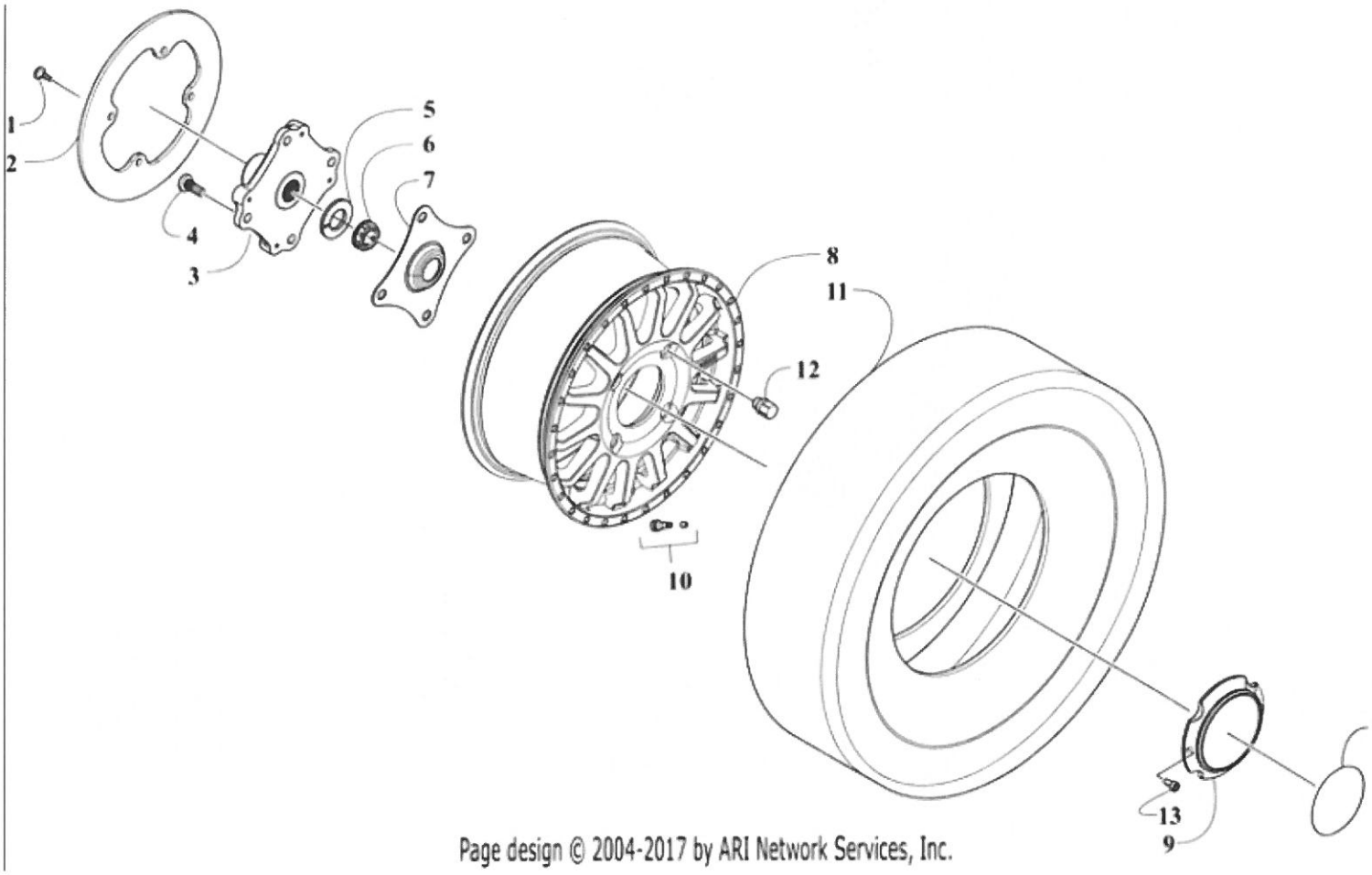

Ref #	Part #	Description	Qty	Context Note
1	1423-611	Screw, Shoulder	16	
2	2402-607	Kit, Brake Disc	4	(inc. 1)

2018 WILDCAT XX LTD EPS GREEN INTERNATIONAL [U2018RHX1POSS] - WIRE HARNESS AND RELATED [302839]

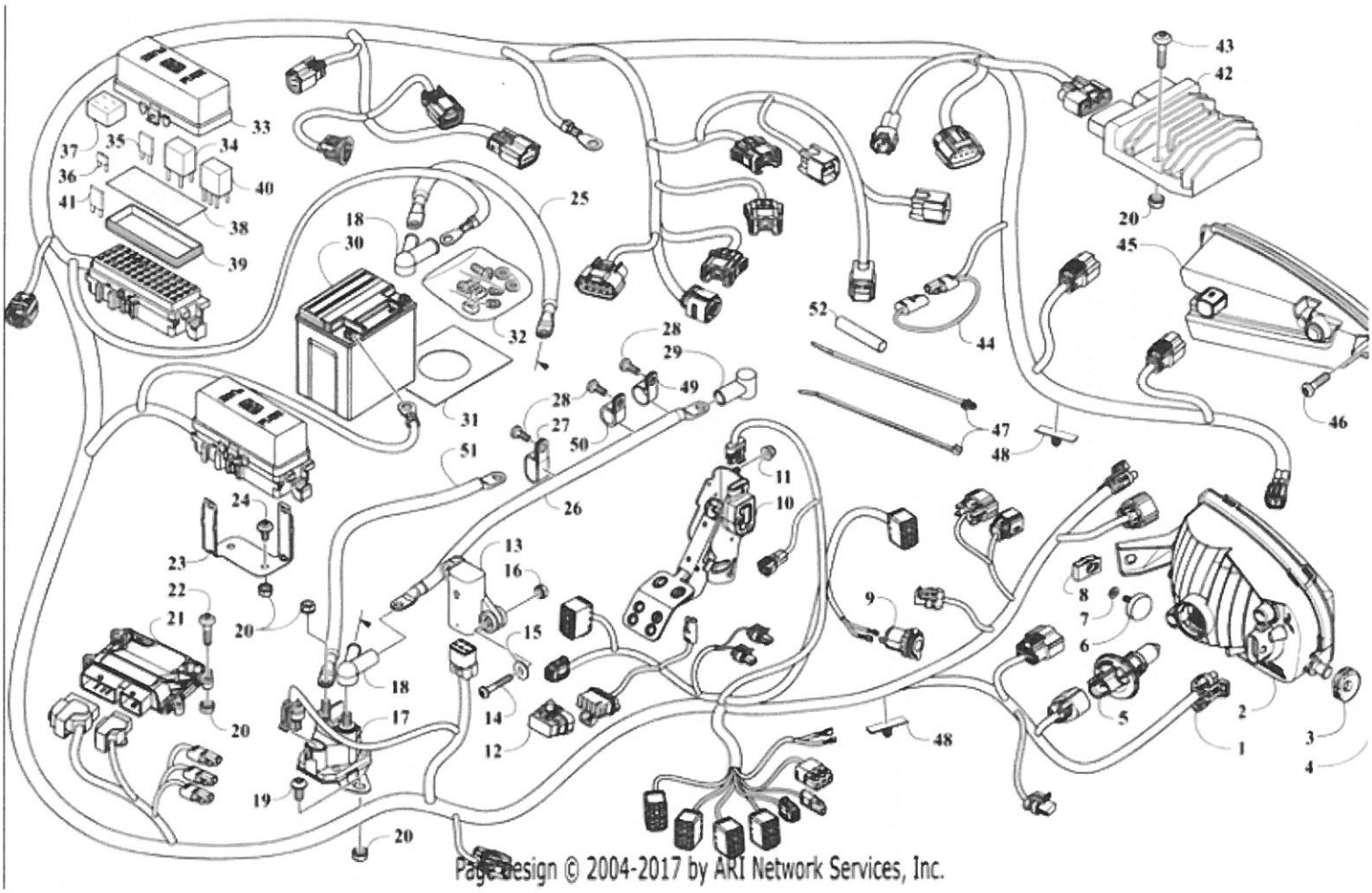

Ref #	Part #	Description	Qty	Context Note
1	0486-660	Harness, Main	1	(inc. 12 and 33-40, 42)
2	0509-162	Headlight, Halogen - Right	1	
2	0509-163	Headlight, Halogen - Left	1	
3	4406-722	Grommet - Right	2	
3	4406-723	Grommet - Left	2	
4	0409-177	Wireform, Headlight	4	
5	0409-182	Bulb, Headlight - H13	2	
6	2623-113	Knob, Adjuster	2	
7	8451-123	Washer, Lock	2	
8	1623-637	Clip, U-Nut	2	
9	0445-157	Outlet, Accessory - 12V DC	2	
10	0509-099	Pedal, Accelerator - Electric	1	
11	8427-802	Nut, Lock	2	
12	0430-103	Cover, Diagnostics Connector	1	
13	0409-064	Sensor, Tilt	1	
14	8468-425	Screw, Machine	2	
15	0123-802	Washer	2	
16	0423-493	Nut w/Washer	2	
17	0445-121	Solenoid, Starter Relay	1	
18	0445-067	Boot, Dual Terminal	2	
19	8476-612	Screw, Machine	5	
20	0623-038	Nut w/Washer	9	
21	0530-226	ECM (PLEASE INCLUDE VIN WHEN ORDERING)	1	
22	8476-630	Screw, Machine	4	
23	0530-170	Bracket - PDM	2	
24	8476-616	Screw, Machine	4	
25	0445-062	Cable, Battery/Solenoid	1	
26	0445-146	Cable, Alternator - Starter/Solenoid	1	
27	1623-762	Clamp, Routing	2	
28	0423-538	Screw, Self-Tapping	4	
29	0645-019	Boot, Terminal	1	
30	0445-115	Battery	1	(inc. 32)
31	0417-022	Pad, Battery	1	
32	0445-082	Kit, Hardware	1	
33	0430-085	Cover, Fuse Block	2	
34	0430-045	Relay (4-pin) 20 Amp	8	
35	0430-144	Circuit Breaker (30 Amp)	2	
36	0430-030	Fuse - 30 Amp	7	
36	0430-032	Fuse - 10 Amp	9	
37	0430-037	Holder, Fuse	2	
38	6411-050	Decal, PDM - 1	1	
38	6411-051	Decal, PDM - 2	1	
39	0430-086	Seal	2	

Ref #	Part #	Description	Qty	Context Note
40	0430-033	Relay (5-pin) 30 Amp	2	
41	0430-142	Resistor, Mini - 68 Ohm	1	
42	0824-072	Regulator, Voltage	1	
43	8476-625	Screw, Cap	2	
44	0486-164	Tether, Accessory Connector	1	
45	0509-106	Taillight - Right	1	
45	0509-107	Taillight - Left	1	
46	1623-933	Screw, Self-Tapping	6	
47	0623-677	Tie, Cable - Push Mount	AR	
47	0123-788	Tie, Cable - 8 in.	AR	
47	0123-903	Tie, Cable - 11.5 in.	AR	
48	0430-102	Clip, Routing	AR	
49	1623-675	Clamp	1	
50	1623-068	Clamp	1	
51	0445-145	Cable, Alternator - Battery	1	
52	1619-705	Conduit - 3.5"	1	
52	1619-706	Conduit - 6"	1	
52	1619-707	Conduit - 5.5"	1	